AVAILABLE TECHNOLOGY

TD
223.1
C522
1987
CBC

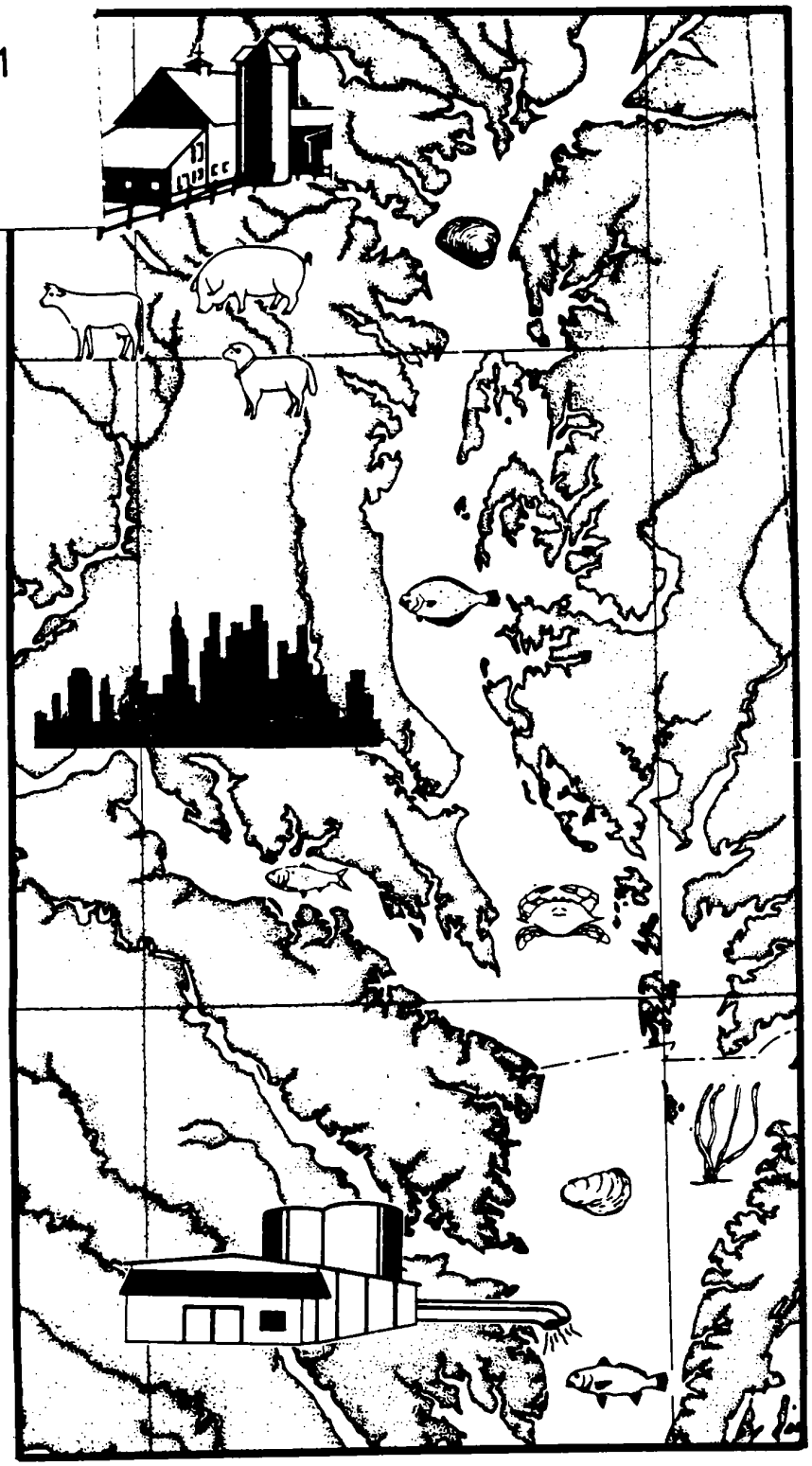

for the Control of Nutrient Pollution in the Chesapeake Bay Watershed

CRC LIBRARY
FILE COPY--DO NOT REMOVE

CRC 87-126

Scientific and Technical
Advisory Committee
Chesapeake Bay Program

Sci 3.1
C58a
1987
CEC

AVAILABLE TECHNOLOGY FOR THE CONTROL OF NUTRIENT POLLUTION IN THE CHESAPEAKE BAY WATERSHED

Scientific and Technical Advisory Committee
Chesapeake Bay Program

Compiled by Andrew A. Randall and Clifford W. Randall

Edited by Clifford W. Randall and Elizabeth C. Krome

SMITHSONIAN
FEB 10 1988
LIBRARIES

CRC Publication No. 126

October 1987

LIST OF ABBREVIATIONS

BMP	Best management practice
BOD	Biological oxygen demand
CBDB	Chesapeake Bay drainage basin
CMAS	Completely mixed activated sludge
COD	Chemical oxygen demand
CSO	Combined sewer overflow
DO	Dissolved oxygen
F/S	Flocculation/sedimentation
HRF	High-rate filtration
mgd	million gallons per day
ML	Mixed liquor
NURP	National Urban Runoff Program
SBR	Sequencing batch reactor
SS	Suspended solids
TIP	Total inorganic phosphorus
TOC	Total organic carbon
UCT	University of Cape Town
VSS	Volatile suspended solids

DISCLAIMER

Mention of trade names or commercial products does not constitute endorsement or recommendation for use.

TABLE OF CONTENTS

I. INTRODUCTION 3

II. AVAILABLE TECHNOLOGY -- OVERVIEW 9

III. FACT SHEETS 12

COMBINED SEWER OVERFLOWS

Collection System Controls

Catchbasins 15
New Sewer Design 16
Sewer Flushing 17
Polymer Injection 18
Flow Routing 19
Fluidic Regulator 20
Hydrobrake 21
Tide Gate 22
Maintenance 23
Inflow/Infiltration Control 24
Sewer Separation 26

Storage

Impoundment 27
In-Receiving Water Storage 28

Treatment

Microscreens 29
Swirl Flow and Helical Bend Regulator/Concentrator 30
High-Rate Filters 32
Flocculation/Sedimentation 34
Screening/Dissolved Air Flotation 36
Activated Carbon Adsorption 38
High-Rate Disinfection 40

NONPOINT SOURCE NUTRIENT CONTROLS

Urban

Porous Pavement 42
Asphalt with Catchbasin 44
On-Line Wet Ponds 45
Off-Line Wet Ponds 47
Extended Detention Dry Ponds 48
Recharge Basins 50
Infiltration Trenches 52
Surface Sanitation/Street Sweeping 53
Marsh Land 54

NONPOINT SOURCE NUTRIENT CONTROLS (continued)

Agricultural

No-Till Cropland 56
Minimum Tillage 58
BMP's for Fertilizer 59
BMP's for Chemicals 61
Animal Waste Facilities 62
Vegetated Filter Strips 64
Riparian Areas 66
Controlled Drainage 67
Terraces 69
Sod Waterways 71
Cost-Sharing Programs 72
Other Approaches 73

POINT SOURCE NUTRIENT CONTROLS

Land Treatment Systems

Slow-Rate Systems 76
Rapid Infiltration 77
Overland Flow 78
Wetlands 80

Wastewater Treatment Plants

Methanol Denitrification 82
Bardenpho System 84
RBC Denitrification 86
Media Column Denitrification 87
Alternating Aerobic/Anoxic Operation 90
Oxidation Ditch 92
Tertiary Chemical Phosphorus Removal 93
Simultaneous Precipitation 94

The Economics and Performance of Biological Nutrient Removal in Activated Sludge Systems 96

Phostrip 98
Operationally Modified (Retrofitted) Activated Sludge Systems 101
Anaerobic/Oxic (A/O) and Anaerobic/Anoxic/Oxic (A2/O) 103
Sequencing Batch Reactors 106
University of Cape Town (UCT) 108
Modified Bardenpho 111

I. INTRODUCTION

There is a general consensus, reached through both scientific and subjective evaluation, that the quality of the Chesapeake Bay aquatic environment is rapidly deteriorating, and that nutrient enrichment is the primary cause. The need, then, is for the implementation of control technology that will reduce the quantities of nutrients, i.e., nitrogen and phosphorus, that enter the waters of the Chesapeake Bay. This report was developed to provide readers with an overview of the various technologies that have been used for the control of nutrients from both point (wastewater treatment plants) and nonpoint (stormwater runoff, groundwater, etc.) sources of pollution, and to assist them in the selection of appropriate technology for particular situations. Information on anticipated removal efficiencies, potential installational and operational difficulties, and economics has been provided to facilitate the selection process. Much of the information contained in this report was extracted from presentations at the Available Technology Workshop held by the Scientific and Technical Advisory Committee (STAC) in Arlington, VA, on March 13-14, 1986. Proceedings of this workshop are available from the Chesapeake Research Consortium for those desiring more details.

Considerations other than technological and economic enter into decisions concerning the implementation of nutrient control technology. For example, the technology most needed or the efficiency of nutrient removal required for enrichment control will vary with the season, the precipitation pattern, the geographical location of the inputs, and the limiting nutrient in the affected water body, as well as other factors. It is important to know whether the land use of the area is mostly urban, agricultural, or forested, because land use determines the dominant source of pollution and the control strategy of choice. Is the receiving water fresh or saline, free-flowing or tidal/impounded? How important to the response of the aquatic system are the nutrient sinks such as bottom sediments? What is the trophic state of the aquatic system, i.e., is the purpose of nutrient control to protect the existing quality of the water or to restore it to a desired former quality? These considerations are important and will be discussed briefly in the following sections of this chapter.

Nutrient Inputs

Nutrient inputs to the bay waters include point (discrete) and nonpoint (diffuse) sources. Sewage treatment plants (STP's) represent the major point source, although industrial wastewaters may be important in some basins. The extent of urbanization and the sewered population in the basin compared with the agricultural activity determine the relative importance of the point sources in each watershed, and each river basin accordingly can be classified as dominated by either point or nonpoint sources. Nonpoint sources include stormwater runoff from all types of land use, baseflow to streams (groundwater), and atmospheric deposition. The importance of the nonpoint sources is greatly influenced by both land use and precipitation patterns. The importance of nonpoint sources increases during wet periods and decreases during dry periods, and also varies according to agricultural practices, the extent of construction, the percentage of impervious area, and erosion-control practices in effect. The point source contributions remain relatively constant and therefore tend to have greater importance during dry seasons, which generally coincide with the peak growing season.

Combined sewer overflows (CSO's) can be major sources of nutrient pollution in urban areas where sewers transport sewage during dry periods and a mixture of sewage and stormwater runoff during wet periods. CSO's are technically a combination of point and nonpoint flows but can generally be treated as point sources because they are discharged at specific, identifiable points. Because CSO discharges are diluted, untreated sewage, they typically contain higher concentrations of organic matter and nutrients than either treated point source contributions or stormwater runoff. The control of CSO's can be critical to restoration and recovery of water quality in the affected areas, and appropriate technologies for their control have been included in this report. CSO's are particularly significant in the James River directly below Richmond.

Atmospheric sources also contribute nutrients, especially nitrogen, to the Chesapeake Bay aquatic environment. The contributions are particularly significant in the vicinity of large metropolitan areas such as Washington and Baltimore. Smullen et al.

Table 1. Bay-wide nutrient loadings (%), March to October.

	Phosphorus		Nitrogen	
Rainfall condition	Point	Nonpoint	Point	Nonpoint
Dry year	69	31	38	62
Average year	61	39	33	67
Wet year	36	64	19	81

Source: Chesapeake Bay Program, U.S. Environmental Protection Agency (1982).

(1982) have estimated these contributions and compared them to other sources.

Nutrient Loading

Researchers for the EPA Chesapeake Bay Program estimated the 1980 nutrient loadings delivered to the bay from its total drainage basin and projected the 2000 loadings (Tippie et al. 1983). They also estimated the relative fractions of loadings from the point and nonpoint sources and concluded that on an annual basis most of the nitrogen is contributed by nonpoint sources, particularly cropland runoff. They also concluded that point sources, especially STPs, contribute most of the phosphorus, except during wet years (Table 1). It has also been observed that most of the nitrogen entering the bay is transported from watersheds throughout the bay basin, while the phosphorus loadings originate nearer the bay, i.e., below the fall line (Hartigan et al. 1983; Tippie et al. 1983). The difference is due to the differing chemical interactions of the phosphorus and nitrogen compounds as well as the differing sources.

The Chesapeake Bay watershed contains eight major basins (Table 2). The three largest tributaries of the bay, the James River, the Potomac River, and the Susquehanna River, transport most of the phosphorus (70%) and nitrogen (78%) loads that enter the tidal waters of the Chesapeake Bay. The James is the largest contributor of phosphorus (28%); each of the other two contributes 21%. The Susquehanna dominates the nitrogen inputs, contributing 40%, compared with the 24% and 14% contributed by the Potomac and James, respectively. The West Chesapeake basin, centered near Baltimore, is the fourth largest contributor of both nutrients, despite its comparatively small land area. This small area contributes 17% of the phosphorus and 11% of the nitrogen that enters the bay waters.

Tributary Classification

The river basins have been classified by Hartigan et al. (1983) as point or nonpoint source-dominated for phosphorus contributions. These researchers concluded that the point source loads of phosphorus to the Potomac and James exceed the nonpoint source loads, but that nonpoint sources contribute most of the phosphorus from the Susquehanna basin. In the urbanized Patuxent River and West Chesapeake basins, the phosphorus loadings from point sources exceed those from nonpoint sources, but in the largely rural Rappahannock, York, and Eastern Shore basins, nonpoint contributions are always the dominant source.

Nitrogen loadings from the major river basins are more often dominated by nonpoint sources than are phosphorus loadings. Nonpoint sources provide most of the nitrogen inputs to the Susquehanna and Potomac under all hydrologic conditions. However, below the fall line, point sources dominate the nitrogen inputs into the Potomac. Point sources constitute most of the nitrogen load to the James River, but nonpoint nitrogen sources become important in a wet year. In the Patuxent River basin, point sources of nitrogen are dominant only under dry conditions, but in the West Chesapeake basin point sources are always greater. The nitrogen loadings to the rest of the basins are primarily from nonpoint sources, as are the phosphorus loadings.

STP's rather than industrial wastewater inputs contribute most of the point source nutrients in virtually all cases, and cropland contributes most of the nonpoint source nutrient load basinwide. This comparison holds true for both phosphorus and nitrogen, although the proportion of the nitrogen contributed by cropland is greater than that of phosphorus. The importance of cropland reflects both its relatively high per-acre loadings and the large areas

of the basin devoted to agriculture (Mackiernan, 1984). Other sources of runoff contribute only 11-12% of the phosphorus load and 6-7% percent of the nitrogen basinwide. However, urban runoff inputs can have a significant impact on water quality in localized areas, and may even be dominant if point source treatment is highly efficient. Watershed-wide, the urban runoff loads are small, because only 3% of the entire basin can be classified as true urban land.

Table 3 is a closer look at nutrient contributions relative to the type of land use, and it shows that cropland in general has the highest unit loadings, measured in pounds per acre per year, for both nitrogen and phosphorus. Note, however, that the ranges are very large. The overlap reflects regional differences in soil type, topography, farming practices, and other factors. The most intensive urban uses can yield more nutrients per unit area than well-managed, low-tillage cropland on pervious soils (Mackiernan, 1984).

Point and Nonpoint Source Tradeoffs

The preceding information shows that technologies for controlling both point and nonpoint source inputs are needed to reduce nutrient pollution in the Chesapeake Bay. It also demonstrates that the importance of the source depends on the nutrient, i.e., nitrogen or phosphorus, being controlled, the land use patterns and cultivation practices in the area of concern, the season of the year, and year-to-year climatological variation. Regardless of these factors,

Table 2. Percentages of nitrogen and phosphorus contributions to the Chesapeake Bay by the eight major basins, by point and nonpoint source, and by dry, average, and wet years (March-October).

	Point sources			Cropland			Other			Nonpoint		
Basin	Dry	Avg.	Wet	Dry	Avg.	Wet	Dry	Avg.	Wet	Dry	Avg.	Wet
					Nitrogen							
Susquehanna	10	10	5	--	85	91	--	5	4	90	90	95
Patuxent	61	49	26	--	43	66	--	8	8	39	51	74
Potomac	48	44	28	--	48	66	--	8	6	52	55	72
Rappahannock	17	13	7	--	72	84	--	15	9	83	87	93
York	22	13	7	--	77	87	--	10	6	78	87	93
James	71	62	43	--	29	49	--	9	8	29	38	57
W. Chesapeake	85	72	52	--	20	40	--	8	8	15	28	48
Eastern Shore	13	10	4	--	83	92	--	7	4	87	90	96
Total	38	33	19	--	60	75	--	7	6	62	67	81
					Phosphorus							
Susquehanna	24	23	12	--	60	77	--	17	11	76	77	88
Patuxent	88	83	58	--	10	33	--	7	9	12	17	42
Potomac	67	59	34	--	23	50	--	18	16	33	41	66
Rappahannock	47	39	14	--	39	71	--	22	15	53	61	86
York	50	35	10	--	44	76	--	6	14	50	65	90
James	86	81	63	--	12	29	--	7	8	14	19	37
W. Chesapeake	93	85	67	--	8	25	--	7	8	7	15	23
Eastern Shore	44	40	16	--	50	79	--	10	5	56	60	84
Total	69	61	36	--	27	53	--	12	11	31	39	64

Source: Chesapeake Bay Program, U. S. Environmental Protection Agency (Tippie et al. 1983).

Table 3. Nutrient loading by land-use type in the Chesapeake Basin.

Land use	Percentage in basin	Estimated loading rate (lbs/acre/yr)	
		Total nitrogen	Total phosphorus
Cropland	15-20	8-18	1.5-5
Pasture	8-12	2-6	0.3-0.5
Forest	60-65	0.5-2	0.05-0.1
Urban/suburban	3-5	4-10	1-2

Source: Chesapeake Bay Program, U.S. Environmental Protection Agency (1982).

it seems reasonable to assume that nutrient loadings from point and nonpoint sources are comparable in biological availability in the Chesapeake Bay environment and, therefore, cost-effectiveness analysis can be used for the development of control strategies.

It is commonly stated that nonpoint source phosphorus is less available than phosphorus in the effluents of biological wastewater treatment plants. This is true over the short-term and is applicable to flowing streams. However, phosphorus bound in sediments can be solubilized by either anaerobic or extreme pH conditions, and when solubilized is readily available for algal growth. The solubilization of both phosphorus and ammonia from sediments is an annual seasonal occurrence in estuarine environments such as the Chesapeake Bay. Thus, control of enrichment requires that the nutrients be prevented from entering the water body, and it matters little on a long-term basis whether the original source was point or nonpoint. Consequently, control strategies for long-term water quality goals can be developed on an economic trade-off basis as presented and discussed by Kashmanian et al. (1985) and Shabman and Norris (1986).

Short-term goals are not as amenable to trade-off strategies because of the seasonal nature of algal growth. Consider that, if phosphorus is the limiting nutrient, for every pound of phosphorus available to them, algae can generate 111 pounds of organic matter as algal biomass. Also consider that bacteria will consume 138 pounds of oxygen in the eventual destruction of the 111 pounds of algal biomass. If the oxygen is consumed quickly, the level of oxygen in the water will be seriously depleted, with undesirable consequences. On the other hand, if the consumption rate can be slowed or consumption partially prevented, reaeration will mitigate the detrimental effects. Thus, the reduction of limiting nutrient loads during peak growing seasons (when point sources usually become most significant) can have a considerably greater impact than reductions during other seasons.

Limiting Nutrient

The issue of whether nitrogen or phosphorus is the nutrient limiting algal growth in the Chesapeake Bay system has been addressed by the Scientific and Technical Advisory Committee in a previous publication (STAC 1986). The situation is complex and depends on the salinity of the water, the season, and the dynamics of oxygen and nitrate consumption in the water. In addition there are other perspectives to consider. Will there be a system response for any reduction in nutrient inputs? And can technology reduce either of the principal nutrients enough to slow the enrichment rate in the system to the desired level?

The two perspectives can be illustrated by a hypothetical situation (Figure 1). In this scenario, the current concentration would be considerably greater than the maximum growth response concentration. The current concentration would have to be reduced below the maximum growth response concentration before any improvement in the system would be observed. A lesser reduction would result in no observable response but would move the system closer to a response point. The figure also shows that the concentration achievable when all usable forms of technology had been fully implemented would unfortunately still exceed the desired concentration, (the concentration required to achieve the water quality objectives). Thus the pollution control effort would fall short of its objective, but substantial improvement would have been achieved and the usable life of the system might have been prolonged.

The technologically achievable concentrations of both nitrogen and phosphorus in the Chesapeake Bay are not known. Neither is the desired concentration, i.e., the goal. These concentrations need to be defined as soon as possible to avoid hampering restoration efforts. The decision whether to emphasize nitrogen or phosphorus controls for long-term purposes can be considered logically, however, on the basis of the chemistry and distribution of the two elements.

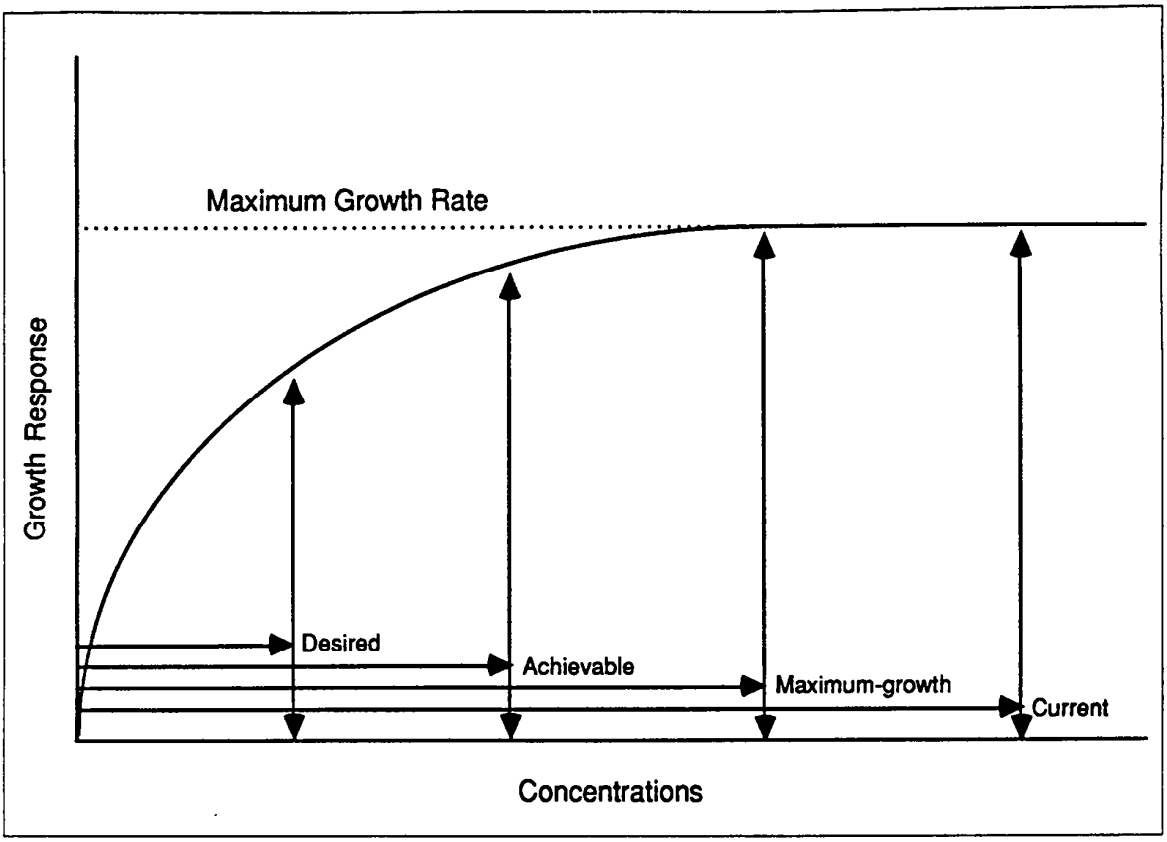

Figure 1. Hypothetical scenario for nutrient control in the Chesapeake Bay.

Controllable vs. Non-Controllable Nutrient Sources

Nitrogen is a gas and is available in limitless supply in the atmosphere. In addition, automobile and other exhausts discharge nitrous oxide compounds into the atmosphere. Rainwater eventually washes these compounds out of the atmosphere into streams and other bodies of water. Nitrogen will adsorb to soil and sediment particles fairly readily when in the form of ammonia but will adsorb negligibly in the nitrate form. Ammonia, however, is invariably converted to nitrate in an aerobic soil or aquatic environment through the action of bacteria. Consequently, nitrates in groundwater are virtually uncontrollable, and those in stormwater runoff are very difficult to control. Since most of the nitrogen inputs are nonpoint, it can be seen that the controllable fraction is significantly limited.

Phosphorus, by contrast, does not have a gaseous phase and is very surface-active. That is, it readily adsorbs to soil and sediment particles and will stay adsorbed except under extreme pH or reduced conditions. Thus it is amenable to both point and nonpoint source controls. Furthermore, most of the phosphorus inputs are point sources, and point sources are readily controllable. Thus, for a long-term control strategy, phosphorus appears to be the nutrient of choice. This conclusion presupposes that phosphorus can be reduced sufficiently to make it the limiting nutrient, even if it were not originally, and that the resulting phosphorus-controlled system would have a lesser growth response than a nitrogen-controlled system, because of the limited nitrogen controls available.

It should be recognized, however, that considerable short-term gains in water quality could be made through nitrogen control during the growing season, in locations where it is the limiting nutrient. Because such gains reduce the organic matter generated in the system and consequently make it easier to restore the system, a strategy of combined nitrogen and phosphorus control is recommended.

LIST OF REFERENCES

Hartigan, J., Sutherland, E., Bonucelli, H., Canvacas, A., Friedman, J., Quasebarth, T., Raffe, K., Scott, T., and White, J. (1983) Chesapeake Bay Basin Model Final Report. Northern Virginia Planning District Commission, Annandale, VA. 240 pp + appendices.

Kashmanian, R., Downing, D., Jaksch, J., and Mahesh, P. (1985) Managing Point/Non-Point Source Loadings: A Cost Effective Approach to Nutrient Reduction in the Chesapeake Bay. Proceedings, Estuarine Research Federation Conference, Durham, NH.

Mackiernan, G. (1985) Sources and Impacts of Nutrients in the Chesapeake Bay. Land Use and the Chesapeake Bay, Virginia Cooperative Extension Service Publication 305-003. pp 1-20.

Scientific and Technical Advisory Committee, Chesapeake Bay Program (1986). Nutrient Control in the Chesapeake Bay, Chesapeake Research Consortium, Inc. 23 pp + appendices.

Shabman, L. and Norris, P. (1986) Coordinating Point and Non-Point Pollution Control: Prospects for a Virginia Case Application. Department of Agricultural Economics, VPI&SU, Blacksburg, VA. 19 pages.

Smullen, J., Taft, J., and Macknis, J. (1982) Nutrient and Sediment Loads to the Tidal Chesapeake Bay System. Chesapeake Bay Program Technical Studies: A Synthesis, U. S. Environmental Protection Agency, Washington, DC. pp 154-219.

Tippie, V., Gillelan, M., Haberman, D., Mackiernan, G., Macknis, J., and Wells, H. (1983) Chesapeake Bay: A Framework for Action. U. S. Environmental Protection Agency, Philadelphia, PA. 186 pp + appendices.

U.S. EPA (1982) Chesapeake Bay Program Technical Studies: A Synthesis. G. Macalaster, D. Barker, and M. Kasper, Eds. U. S. Environmental Protection Agency, Washington, DC. 632 pp.

II. AVAILABLE TECHNOLOGY--OVERVIEW

Many technologies and techniques available for the control of nutrients are appropriate for use in the Chesapeake Bay Drainage Basin. The fact sheets in Section III of this paper briefly describe the most important of these technologies and give cost and efficiency information whenever possible. Also included in most fact sheets is a section on the potential advantages and disadvantages of the system, followed by a few helpful references for more information. This is by no means a comprehensive listing of the sources used.

Some of the technologies or techniques included in the fact sheets are relatively new or may not have been extensively researched. Qualitative remarks regarding efficiencies have been included when found in the pertinent literature and when no actual data were available.

The general discussion that follows should serve as an orientation to the processes described in the fact sheets.

Control of Combined Sewer Overflows

The technology available for the control and treatment of combined sewer overflows (CSO's) can be divided into three major categories: collection system controls, storage, and treatment.

Collection system controls are management alternatives for wastewater interception and transport. Options may be as simple as improved maintenance or as labor-intensive and costly as sewer separation. Between these two extremes are a variety of devices, such as fluidic regulators, and system approaches,such as remote flow monitoring and control. All of these methods, with the exception of sewer separation, allow the maximum use of existing collection facilities by control and/or enhancement of flow through the system pipelines.

Storage is the impoundment of wet-weather flow until conditions permit it to be sent to treatment facilities. It is the best documented abatement measure among the technologies presently available. It is also an essential one because of the high volume and variability of storm flow. Storage permits maximum use of existing facilities and is the most cost-effective way to reduce pollutants. Some storage facilities may be designed to treat wastewater via sedimentation or may have other functions such as dry-weather flow equalization or flood protection. Detention facilities can also provide storage, flow reduction, and treatment by settling or infiltration. But even impoundment in and of itself is an effective way of dealing with stormwater flows.

Treatment technologies specifically directed at CSO's are confined to physical/chemical processes. Biological processes, which are dependent on microorganisms, have difficulties adapting to the intense flow conditions and shock-load effects of storm-generated overflows. Because physical/chemical treatment usually relies on chemical dosing, which can be varied with changing conditions, these systems have an inherent flexibility and are able to cope with runoff from storms. Physical devices such as swirl regulators and sedimentation basins remove pollutants more efficiently when solids concentrations are high. Also, physical/chemical technologies are well suited to high-rate applications, which reduces capital costs.

In practice most systems integrate several or all of these approaches to CSO control. Two common integrated systems are storage/treatment and dual-use wet-weather flow/dry weather flow facilities. Storage/treatment systems use storage to protect the treatment system, reducing the quantity and improving the quality of stormwater flows, and allowing the treatment system to stay within its operational abilities. Dual-use wet-weather flow/dry-weather flow facilities are those that can provide effective treatment under both wet and dry conditions. High-rate filtration, microscreening, and equalization basins are just some of the potential technologies capable of constant use.

Control of Urban Non-Point Source Pollution

Most of the methods for controlling urban non-point pollution (often referred to as urban best management practices or BMP's) are matters of land management. These practices may pertain either to the source or site of runoff, or to the collection system of storm drains.

Source controls are aimed at erosion, runoff quantity (flooding), and pollutants leaving the sites where they originate. Control is accomplished in many ways, ranging from policies concerning use, storage, and disposal of chemicals to structural technologies such as porous pavements. Even simple measures such as erosion control at construction sites can be very significant. These measures, alone or in combination, can be effective controlling nutrient and pollutant transport in runoff, preserving natural drainage patterns even with new construction, reducing drainage costs and pollution, and enhancing aesthetics, groundwater supplies, and flood protection.

Collection system controls for stormwater systems involve the use of detention, retention, and infiltration structures. These structures may vary considerably in design, but most are essentially basins or ponds that receive and hold collected stormflow. These basins or ponds are termed either on-line or off-line, depending on what happens to the water that comes into each structure. On-line basins and ponds ultimately discharge part or all of the water received into local surface waters. Treatment is usually accomplished by sedimentation in detention ponds and by biological action in wet ponds. Off-line basins and ponds rely on infiltration into the groundwater or evapotranspiration into the atmosphere and may virtually eliminate pollutants through these processes.

Many of these techniques can be used in combination within a single system. For example, stormwater can be re-used for irrigation, and small lakes or wet ponds can be used for recreation. In addition, some of the same strategies used for CSO's are equally applicable to stormwater systems. Examples of these are hydrologic-hydraulic design rationales and new cross-sectional shapes for pipelines.

Control of Agricultural Nonpoint Source Pollution

Agricultural best management practices deal with pollution that originates from either croplands or pasturelands and farm animal facilities. Cropland pollution is the result of erosion and transport of fertilizers and pesticides by stormwater runoff. Pollutants from pasturelands and animal facilities result from the presence of animal wastes.

BMP's for croplands can be as simple as more efficient use of fertilizers and herbicides or as complex as no-till farming. Measures for animal wastes are much more structurally intensive, involving construction of storage or treatment facilities for manure and necessitating planning in relationship to surface waters. Improved practices for the land application of manure in relationship to the season and local weather are also an important part of controlling nutrients from animal wastes.

Control of Point Source Pollution

Wastewater treatment plants can operate in a variety of ways depending on the type of waste being treated and the degree of removal desired (Table PT-7). For the control of nutrients the methods used may be chemical, biological, or both.

Chemical removal is the traditional method of removing phosphorus from wastewater. The chemicals may be added during primary treatment, during activated-sludge treatment, or after routine treatment in a separate (tertiary) treatment process.

Chemical removal of phosphorus is possible because orthophosphate, a form of phosphorus that is soluble and would normally leave in the plant effluent, will react with chemicals such as alum and lime to form insoluble compounds. The phosphorus precipitates out of solution, is settled, and is removed as waste sludge.

Biological treatment processes rely on the metabolic processes of microorganisms to remove nitrogen and/or phosphorus. In the case of nitrogen, nitrates are recycled into an anoxic zone (oxygen is not present) where microbes break them down while using them as an oxygen source to metabolize organic compounds. Nitrogen is converted to its elemental form during the process and is released as a gas. Using nitrates as an oxygen source instead of discharging them also recovers a significant amount of aeration energy if influent wastewater is utilized as the organic food source. For phosphorus removal, flow is passed through an anaerobic zone (neither oxygen or nitrates are present). Here microbes store organics as food, and energy is saved through microbial anaerobic stabilization for BOD that would otherwise require aeration. When flow reaches an aerobic zone the microbes metabolize the stored organics and store the energy as ATP, which is partially composed of phosphorus. Thus the microbes take most of the available phosphorus into their cells, using it to make ATP. As a result phosphorus can be removed by removing the microbes in the form of waste sludge.

Both types of treatment have their advantages and disadvantages. Reliance on chemicals can add flexibility to operations since chemical dosages may

be easily and quickly varied; also, performance can be more reliably predicted for most wastewaters. The disadvantages of chemical processes are the large amounts of sludge and high operating costs. Biological treatment can be much more energy-efficient and less expensive to operate; but some biological systems have high capital costs, and performance can be upset for a variety of reasons such as shock-loading or the presence of toxins.

For both processes, retrofit is feasible and may be cost-effective depending on the conditions and treatment level needed. For achieving stringent standards, the use of both chemical and biological nutrient removal in the same plant may be the most cost-effective solution.

Control of Atmospheric Pollution

Technology for the control of atmospheric pollution is confined to source controls. Catalytic convertors and unleaded gas for automobiles, and industrial air pollution controls such as packed columns and electrostatic precipitators are examples of these technologies. Emission standards and public policy in general have an obvious effect on the quantity of pollutants released to the atmosphere and ultimately contaminating surface waters through precipitation. Because different technologies and practices are used to control air pollution, and because its short-term significance is minor relative to other pollutant sources for the Chesapeake Bay, no fact sheets for air pollution technology are included in this report.

III. FACT SHEETS

COMBINED SEWER OVERFLOWS
- Collection System Controls
- Storage
- Treatment

NONPOINT SOURCE NUTRIENT CONTROLS
- Urban
- Agricultural

POINT SOURCE NUTRIENT CONTROLS
- Land Treatment Systems
- Wastewater Treatment Systems

COMBINED SEWER OVERFLOWS

COLLECTION SYSTEM CONTROLS

- Catchbasins
- New Sewer Design
- Sewer Flushing
- Polymer Injection
- Flow Routing
- Fluidic Regulator
- Hydrobrake
- Tide Gate
- Maintenance
- Inflow/Infiltration Control
- Sewer Separation

STORAGE

- Impoundment
- In-Receiving Water Storage

TREATMENT

- Microscreens
- Swirl Flow and Helical Bend Regulator/Concentrator
- High-Rate Filters
- Flocculation/Sedimentation
- Screening/Dissolved Air Flotation
- Activated Carbon Adsorption
- High-Rate Disinfection

CATCHBASINS

Description

Catchbasins are chambers or wells built at the curbline of a street for the admission of runoff to a sewer or stormwater system. A sump traps sediment preventing heavy or large solid matter from the street from entering the sewers. Catchbasins are also relied upon to prevent odor from escaping low-velocity sewers by providing a water seal. Recently there have been attempts to optimize configurations, design, and maintenance of basins to enhance removal of solids.

Efficiency

Conventionally designed catchbasins may not be effective for solids removal. Infrequently cleaned catchbasins can actually contribute to pollution when trapped solids are flushed out. With more frequent cleanings, however, they may be somewhat more effective. A study in Boston yielded potential removals of 60-97% of solids, 54-88% of BOD, and 10-56% of COD. Addition of inlet strainers marginally increases pollution removal (maximum of 10%), but these strainers also accumulate solids during dry weather.

Economics

Maintenance and disposal of accumulated solids constitute the majority of costs for pollutant removal with catchbasins. Cost studies in Boston concluded that frequent cleaning (every six months) of catchbasins was very cost-effective compared with relying on treatment plants, sewer cleaning, in-line storage, and swirl treatment. With semi-annual cleanings of catchbasins, costs were $0.0046/lb solids, compared with $0.0391 for an in-line system, and $0.1527 for a system in Saginaw, MI, utilizing swirl facilities. Catchbasins are very poor, however, for control of nutrients.

Advantages

1. Effectively reduce total pollution.
2. Improved designs may result in higher removal efficiencies.

Disadvantages

1. Poor for nutrient removal.
2. Require frequent cleaning and disposal.
3. Strainers impractical because of maintenance requirements.
4. Lack operational flexibility, and later improvement not feasible.

Useful References

1. Aronson, G. L., Watson, D. S., and Pisano, W. C. (1983). Evaluation of Catchbasin Performance for Urban Stormwater Pollution Control. USEPA Report No. EPA-600/2-83-043, NTIS No. PB 83-217-745.

NEW SEWER DESIGN

Description

New design methods avoid some of the inadequacies encountered with older concepts such as the Rational Method and the Kutter or Manning equations. In-line storage, steeper slopes, and different cross-sectional shapes for sewers are also used to control runoff quantity and quality. A major concern is reducing the "first flush" of pollutants associated with storms.

Efficiency

The Unit Hydrograph Model and the EPA Storm Water Management Model have predicted peak runoff rates 25-150% greater than values obtained using the Rational Method. These models calculate storage volume for effective use of flow control devices. Design of sewers to maintain flushing velocities in dry-weather flows reduces pollutants in the "first flush". Upstream storage is effective in reducing overflow events and controlling pollutants.

Economics

Costs of sewer and pumping station installation and power should be compared with capital and operational costs for conveyance, storage, and treatment of the first flush that would otherwise result. In a study in Elizabeth, NJ, the least expensive sewer design for a given treatment level was a combined sewer system with additional storage provided. Cost of in-line storage vs. basins depends on site restrictions, but off-line basins tend to be less costly (as little as 30% of the cost of in-line storage).

Advantages

1. Reduces costs and operational problems at treatment plants.
2. Greatly diminishes overflows and release of untreated wastes.
3. Reduces maintenance problems from sediment buildup.
4. Cost of pollution control by in-system storage and flow control devices is small compared to the total cost of sewer system.

Disadvantages

1. May not be as cost-effective as alternatives.
2. System performance difficult to alter once constructed.
3. More difficult to construct and difficult to design.

Useful References

1. Kaufman, H. L. (1978). Conventional and Advanced Sewer Design Concepts for Dual Purpose Flood and Pollution Control. USEPA Report No. EPA-600/2-78-090, NTIS No. PB 285 663.

2. Sonnen, M. (1977). Abatement and Deposition and Scour in Sewers. USEPA Report No. EPA-600/2-77-212, NTIS No. PB 276 585.

SEWER FLUSHING

Description

Sewer flushing is the use of water to flush deposited solids, preventing continuous buildup between storms, and facilitating the routing of combined sewage to treatment.

Efficiency

Flushing can reduce solids deposited in dry weather for small-diameter laterals. A 35-45% removal of organics for segment lengths of more than 1000 ft has been shown. Daily flushing in one area of Boston reduced overall SS discharge by 7% and BOD by 17.6%. Sewer flushing during dry days is more effective at removing BOD than SS because the heavier particles tend to resettle downstream. Generally flushing is more successful with strong sewages.

Economics

When combined with storage, sewer flushing may be cost-effective for BOD removal. In Boston cost reductions were 7% for flushing and storage as compared with a CSO storage/treatment and disinfection facility designed for a one-year storm. Automatic flushing stations were estimated at $100,000 each in 1979, including operations and maintenance costs (20 years at 6.625%).

Advantages

1. Alleviates wet-weather CSO pollution, reduces downstream treatment requirements.
2. Maintains open flow areas for the pipes in the sewer system.

Disadvantages

1. Must be used with great frequency to remain effective.
2. May not be cost-effective, depending on site conditions, even for existing sewers.

Useful References

1. Pisano, W. C. (1979). Dry-Weather Deposition and Flushing for Combined Sewer Overflow Pollution Control. USEPA Report No. EPA-600/2-79-133.

2. Kaufman, H. L., and Fuhsiung, L. (1980). Alternatives for Evaluation of Sewer Flushing Dorchester Area-- Boston. USEPA Report No. EPA-600/2-80-118, NTIS No. PB 81-142 648.

POLYMER INJECTION

Description

Polymer is injected into combined sewer flow, reducing the resistance of the water against the pipe walls and greatly increasing the flow capacity of the pipe. This technique can be used to reduce localized flooding and excessive overflows for a marginally inadequate line during critical periods.

Efficiency

Up to 144% increases in capacity have been achieved. Polymer concentrations of 35-100 mg/l have eliminated surcharges of more than 6 ft. Treatment efficiency is improved because more of the flow reaches the treatment plant.

Economics

Direct cost savings are possible since relief sewer construction can be eliminated. These savings can be substantial in areas where pre-existing structures make construction or alterations expensive.

Advantages

1. Flooding and release of untreated flow can be decreased or eliminated without the expense, delay, and disruption of normal activities associated with construction.

Disadvantages

1. Does not eliminate problem; requires more operation and maintenance than a properly designed sewer.
2. Possibility of operator or mechanical error.
3. Ongoing expense.

Useful References

1. Chandler, R. W., and Lewis, W. R. (1977). Control of Sewer Overflows by Polymer Injection. USEPA Report No. EPA-600/2-77-189, NTIS No. PB 272 654.

FLOW ROUTING

Description

Flow routing maximizes the use of existing sewer capacity to control overflows and enhance system treatment. Remote monitoring of rainfall and flow levels is integrated with a centrally computerized console. Control gates installed at strategic points control passing flow so that existing in-pipe storage may be used to alleviate peak flows and pollutant overflows.

Efficiency

In Seattle, WA, overflow and pollutant reduction from 12 overflow points averaged 55-68%. Experimental automatic control eliminated 90% of the overflow volume. DO has increased by 1-2 mg/l and coliforms have decreased 50% in the receiving water. In Elizabeth, NJ, the number of overflow events was reduced by 65%.

Economics

The Seattle system, serving 13,250 acres, cost $400/acre in the mid-1970's. A specific study for Seattle at the time stated that sewer separation would cost $10,000/acre. One-half the costs for flow routing were for computers and software.

Advantages

1. Effective use in Seattle, Minneapolis-St. Paul, and Detroit.
2. Uses existing system, minimizing new construction.
3. Computers are increasingly capable and less expensive.

Disadvantages

1. Site-specific; requires large, flat existing combined system.

Useful References

1. Field, R. (1982). An Overview of the U.S. Environmental Agency's Storm and Combined Sewer Program Collection System Research. Water Res. 16, 859-870.

2. Watt, T. R. (1974). Sewerage System Monitoring and Remote Control. USEPA Report No. EPA-600/2-74-022, NTIS No. PB 242 107.

3. Leiser, C. P. (1974). Computer Management of a Combined Sewer System. USEPA Report No. EPA-670/2-74-022, NTIS No. PB 235 717.

FLUIDIC REGULATOR

Description

A fluidic regulator is a self-powered structure in the sewage flow stream and permanently open flow passages. It has no mechanical moving parts and uses energy from the sewage flow. Using simple dip-tube sensors, the regulator diverts flow at a certain level. It is made of non-corrodible materials such as concrete and stainless steel.

Efficiency

Fluidic regulators can achieve most of the performance of dynamic overflow regulators and are more reliable in terms of blockages, fouling, and other problems typical of conventional regulators. Performance may decline outside of design range.

Economics

Fluidic regulators are estimated to cost 40% more and 50% less than retrofit of conventional static and conventional dynamic regulators, respectively. For a new installation the fluidic regulator costs roughly 10% more than a conventional static unit. Maintenance costs should be less than for conventional dynamic units.

Advantages

1. Flexibility and performance near that of a dynamic regulator but at lower cost.
2. Simple, reliable technology with low maintenance requirements.
3. Has been used in Philadelphia, PA.

Disadvantages

1. Limited performance information available.

Useful References

1. Field, R. (1982). An Overview of the U.S. Environmental Agency's Storm and Combined Sewer Program Collection System Research. Water Res. 16, 859-870.

2. Freeman, P. A. (1977). Evaluation of Fluidic Combined Sewer Regulators Under Municipal Service Conditions, USEPA Report No. EPA - 600/2-77-071, NTIS No. PB 272 834.

HYDROBRAKE

Description

A Hydrobrake (a trade-marked name) is a small device that can be used in stormwater tanks as a flow regulator, as a CSO regulator, or as an upstream off-line flow attenuator. The Hydrobrake delivers a virtually constant rate of discharge regardless of head variations, without moving parts or the use of external energy. Hydrobrakes can be used in conjunction with off-line storage or catchbasins to reduce overflow events that would cause street and basement flooding.

Efficiency

Hydrobrake flow rates are substantially lower than those for an orifice of the same size and operate more independently of head than conventional openings. Hydrobrakes can dampen "first flush" effects, enhancing use of existing facilities, as well as alleviating surcharge and basement flooding problems.

Economics

Where surface ponding is possible, Hydrobrake use without off-line storage structures is most cost-effective. Even with storage structures Hydrobrakes can be more cost-effective than other alternatives where both surcharging and overflows are the prevailing problems. The Hydrobrake itself is relatively inexpensive and can yield large savings for sites where other alternatives are prohibitive in cost. In Cleveland, inlet control with the Hydrobrake cost $140-$240/acre drained, or $13,800-$17,700/acre when combined with storage. Retention combined with pumping would have cost $22,000/acre, according to calculations in the Cleveland study.

Advantages

1. Has been used in Cleveland, OH, as well as New York and Rochester, NY.
2. Not susceptible to blockage.
3. Reduces sewer surcharge and basement flooding.
4. Minimal maintenance requirements.

Disadvantages

1. Manufacturing and delivery delays for specialty items.
2. Small diameters (below 2 in.) may clog in very filthy waters.

Useful References

1. Matthews, T. M., Pitts, P. D., Jr., Larlham, R. C., and Koogan, J. C. (1983). Hydrobrakes Regulated Storage System for Stormwater Management. USEPA Report No. EPA-600/2-83-097, NTIS No. PB 84-110 378.

TIDE GATE

Description

A rubber "duck-bill" tide gate has been developed to prevent the many problems associated with conventional tide gates. The duck-bill gate is a passive device, requiring no outside energy source, and seals tightly by virtue of its shape and material. It protects collector sewers and interceptors from the inflow of tidal or high river-stage waters just as conventional tide gates do.

Efficiency

The duck-bill tide gate is more likely than conventional tide gates to effectively seal the pipeline, preventing overflows and plant bypassing. The chance of severe failure is decreased also. The capacity of the system is maintained more reliably because backflow conditions are less likely.

Economics

The main economic advantages of the duck-bill gates come from increased reliability over conventional tide gates. Poor performance of tide gates causes backflows, flood conditions, increased treatment costs, and treatment plant upsets. Upstream flooding is less likely since the capacity of the system is better maintained. Maintenance costs may be significantly less.

Advantages

1. Conventional tide gates fail to close tightly (because of debris blockage, warpage, and corrosion), stick in one position, and need constant regular maintenance. All of these are expected not to be problems for the "duck bill" gate.
2. Demonstration has been initiated in New York, NY.

Disadvantages

1. Insufficient use to confirm expected performance or to define potential problems.

Useful References

1. Field, R. (1982). An Overview of the U.S. Environmental Agency's Storm and Combined Sewer Program Collection System Research. Water Res. 16, 859-870.

MAINTENANCE

Description

Maintenance for combined sewer systems consists of removing debris and repairing hardware so that the existing system will work as it was designed to.

Efficiency

Proper maintenance for CSO systems working in a state of disrepair can yield a substantial abatement of pollution. Proper maintenance prevents premature overflows and backwater intrusion due to malfunctioning regulators and tide gates, improper diversion settings, and partially blocked interceptors. Maintenance is an absolute necessity for a total system approach to pollution control, and much of the effectiveness of an entire system can be lost by neglecting it.

Economics

Some cities have gained high CSO control cost benefits by implementing good maintenance for their existing systems.

Advantages

1. Substantial improvement for a small investment.
2. Prevents bypassing of treatment plants by sewage leaks into surface waters upstream in the sewer network.

Disadvantages

1. Existing system may not be sufficient even when operating as designed.
2. Old or improperly designed systems may be difficult to maintain.

Useful References

1. Field, R. (1982). An Overview of the U.S. Environmental Agency's Storm and Combined Sewer Program Collection System Research. Water Res. 16, 859-870.

INFLOW/INFILTRATION CONTROL

Description

Inflow/infiltration techniques include: reduction of inflow from extraneous sources such as downspouts; rehabilitation of sewers using conventional methods or new technologies such as Insituform; and impregnation of pipes with sulfur to increase strength and reduce permeability. Insituform, a polyester fiber felt tubing, is inserted through a pipeline using water that is then heated, causing a resin to form a hard impermeable lining. A new installation technique is trenchless sewer construction, which consists of plowing in solvent-welded polyvinyl chloride (PVC) pipe on a grade established by a laser unit (much as underground cables are laid).

Efficiency

Inflow Reduction. Reduction of extraneous sources improves the use of the sewer system, reducing the quantity of flow that must be treated.
Sewer Rehabilitation. Sewer system rehabilitation is only partially effective because of migrating leakage and the difficulty of correcting house connections.
Insituform. Insituform provides structural integrity with respect to infiltration and does not reduce flow area significantly. It is also resistant to corrosion.
Impregnated Concrete Pipe. Impregnated pipe has reduced permeability, which prevents the deterioration of internal reinforcement. Sulfur-impregnated nonreinforced pipe approaches the strength of steel-reinforced pipe, with improved resistance to corrosion.
Trenchless Sewer. There is much less infiltration than with conventional pipe because PVC resists corrosion, the 600-foot pipe lengths drastically reduce the number of joints, and these joints are chemically welded.

Economics

Inflow Reduction. In Springfield, IL, it was estimated that the cost of removing downspouts would be recovered in 16 months from reduced costs of operation and maintenance.
Sewer Rehabilitation. Costs associated with construction and excavation are major expenses of conventional rehabilitation and sliplining processes.
Insituform. Insituform does not require excavation or major construction for either installation or reestablishment of service connections, and it eliminates the need for grouting.
Impregnated Concrete Pipe. Impregnation can significantly slow the deterioration of pipelines, reducing costs due to infiltration and maintenance costs. Sulfur impregnation may save from $0.83 to $2.08 per linear foot for a 27-in diameter pipe.
Trenchless Sewer. The trenchless method could be at least 16% less expensive than conventional pipe.

Advantages

Inflow Reduction
1. Maximizes effective collection system and treatment capabilities while preventing overflow pollution.
2. Can greatly reduce complaints of basement flooding.
3. Reduces operation and maintenance load for the sewage system.

Sewer Rehabilitation

1. Has been used in many localities and can reduce infiltration.

Insituform
1. Does not require excavation and extensive construction.
2. Does not impede flow, and may increase it through reduced friction.
3. Fills cracks and gaps, surmounts rubble, and can turn 45° during installation.
4. Resists corrosion.
5. Has been demonstrated in Northbrook, IL, and Hagerstown, MD.

Impregnated Concrete Pipe
1. Permeability can be reduced for a small initial expense, reducing deterioration and thus maintenance and replacement costs.
2. Strength improved, reducing reinforcement and capital costs.

Trenchless Sewer
1. Infiltration and corrosion greatly reduced.
2. Has been demonstrated successfully at South Bethany Beach, DE.

Disadvantages

Inflow Reduction
1. Initial expense of removing downspouts and illegal connections.

Sewer Rehabilitation
1. Only partially effective because of migrating leaks and difficulties in correcting house connections.
2. Requires extensive excavation and construction.

Insituform
1. Experience not as extensive as that with conventional techniques.

Impregnated Concrete Pipe
1. May be more difficult to obtain than conventional pipe.

Trenchless Sewer
1. Full-scale experience limited and cost-effectiveness unknown.

Useful References

1. Field, R. (1982). An Overview of the U.S. Environmental Agency's Storm and Combined Sewer Program Collection System Research. Water Res. 16, 859-870.

SEWER SEPARATION

Description

Sewer separation involves the construction of an entirely new system in which wastewater and runoff flow through separate pipelines.

Efficiency

The effectiveness is limited because sewer separation does not deal with treatment of stormwater, a major contributor of pollution.

Economics

Because constructing separate sewers is prohibitively expensive, it has been largely abandoned. Sewer separation for the US would cost $100 billion, or three times the cost of alternative control measures. A study conducted for Seattle calculated a cost of $10,000/acre for sewer separation as opposed to $400/acre for a remote monitoring, computerized flow-routing system servicing 13,250 acres.

Advantages

1. Eliminates overflow and bypass of sewage after storms.

Disadvantages

1. Extremely expensive.
2. Extremely difficult to install in a developed area.
3. Does not deal with stormwater pollutant control.

Useful References

1. Field, R. (1982). An Overview of the U.S. Environmental Agency's Storm and Combined Sewer Program Collection System Research. Water Res. 16, 859-870.

IMPOUNDMENT

Description

Storage containers may include earthen basins, concrete holding tanks, tunnels, underground and underwater containers, underground "silos," natural and mined underground and above-ground formations, abandoned facilities, and existing sewer lines.

Efficiency

Storage facilities may be used effectively for sedimentation, but are mainly effective in preventing shock loading to receiving waters and/or sewage treatment plants.

Economics

Storage allows maximum use of existing facilities and usually results in the lowest cost of any technique for pollutant removal.

Advantages

1. Best documented and most cost-effective technique.
2. Auxiliary functions such as flood protection, sewer relief, flow transmission, and dry-weather flow equalization.

Disadvantages

1. Cannot deliver a high degree of treatment.

Useful References

1. Field, R., and Struzeski, E. J., (1972). Management and Control of Combined Sewer Overflows. Journ. Wat. Pollut. Control Fed. 44, 7 1393-1415.

2. Field, R. (1975). Urban Runoff Pollution Control- State-of-the-Art. Journ. of the Environmental Engineering Division, ASCE. 101 EEI 107-125.

IN-RECEIVING WATER STORAGE

Description

CSO or stormwater flow is contained between floating plastic curtains placed inside an existing body of water such as a lake. When the overflow ends, pumps automatically start, and the surrounding waterbody enters the compartments and pushes stormflow back to the first compartment, where it is pumped back to the plant.

Economics

This storage method is inexpensive because of low-cost materials, absence of land requirements, and short installation time. Costs could be 5-15% of costs for a conventional concrete tank.

Efficiency

In three locations in Sweden performance was good. The structure was subjected to ice and wind loads and did not fail.

Advantages

1. Will soon be demonstrated in Fresh Creek Basin in New York City.

Disadvantages

1. Experience insufficient to show limitations.

MICROSCREENS

Description

The microscreen is a liquid-straining device that utilizes a micro-fabric mesh to remove suspended solids from passing flow. These machines are manufactured by several companies, and most consist of a rotating drum covered with a finely woven fabric of stainless steel. Water flows through the screen, leaving solids on the inside. The unit is backwashed to remove accumulated debris.

Efficiency

Some demonstrations have yielded SS removals of more than 90% for high-rate applications. Full-scale studies in Syracuse, NY, achieved about 50% removal of SS and about 33% removal of BOD, although actual removal depends on the type of device, screen aperture size, and hydraulic loading rate. Efficiency decreases as hydraulic loading rate increases. Removal of heavy metals is inconsistent and often insignificant. Operational problems related to start-up, cleaning, and achieving design loading rate have been reported for some brands in many studies of microscreen devices.

Economics

Estimates from the mid-1970's were that microscreen costs 70% more than ultrafine screens. A study in Syracuse, NY, in the late 1970's indicated that costs of microscreens are 1.8-3.8 times the costs of the same system using a swirl flow regulator. It was concluded that swirl regulators were more cost-effective for the small overflow stations in use during the study.

Advantages

1. Can remove substantial amounts of solids from CSO flow.
2. Demonstrated in Syracuse, NY, and Fort Wayne, IN.
3. Suitable for high-rate loading and treatment.

Disadvantages

1. May not be cost-effective for some treatment levels.
2. No removal of dissolved pollutants.

Useful References

1. Drehwing, F. J., Oliver, A. J., MacArthur, D. A., and Moffa, P. E. (1979). Disinfection Treatment of Combined Sewer Overflows, Syracuse, New York. USEPA Report No. EPA 600/2-79-134, NTIS No. PB 8-113 459.

2. Drehwing, F. J. (1979). Combined Sewer Overflow Abatement Program, Rochester, NY - Vol II: Pilot Plant Evaluations. USEPA Report No. EPA-600/2-79-03 1b, NTIS No. PB 80-149-262.

SWIRL FLOW AND HELICAL BEND REGULATOR/SOLIDS CONCENTRATOR: SWIRL DEGRITTER

Description

A swirl flow concentrator is a simple ring-shaped basin containing a central circular weir. The weir controls flow passing through the device as well as causing a "swirl" action that separates liquid from solids. Flow is separated into a large volume of clear overflow and a low volume of concentrated waste, which is stored for later purification or sent directly to the wastewater treatment plant. Helical regulators work on similar principles. The swirl is also used as a degritter for treatment facilities.

Efficiency

Removals of 50% of SS and BOD are possible. Net removal of SS is 19% greater than with conventional regulators. Treatment efficiency is relatively constant over a wide range of flow rates.

Table CSO-1. Efficiency of pilot swirl degritter at Denver, CO.

Influent SS (mg/l)	Grit removal (%) at flow rate (gpm)			SS removal (%) at flow rate (gpm)		
	15	40	70	15	40	70
100	69.0	59.8	54.8	56.5	32.5	13.3
200	100.0	91.0	85.7	66.6	48.1	33.3
400	100.0	99.1	93.8	70.4	54.1	41.0

Economics

Swirl systems for primary separation are cost-competitive with flocculation/sedimentation systems. Choice of treatment for CSO's is dependent on influent quality and the treatment level required. Construction costs of a swirl system to function as a degritter are about half the costs for a conventional degritter, and operation and maintenance costs are lower than for conventional grit chambers.

Advantages

1. Regulates combined sewer flow.
2. Provides high-rate preliminary treatment.
3. Constant treatment efficiency over a wide range of flow rates.
4. Simple annular-shaped construction.
5. Absence of mechanical parts that use energy.
6. Demonstrated use in Syracuse, NY, and Lancaster, PA.
7. Small tankage requirement in comparison with sedimentation.
8. Use on separate storm drains permits treatment of separate sewer lines and use of smaller storage tanks.

9. Can function during low-flow or dry-weather periods.
10. For degritting the efficiency and lack of moving parts offer economic and operational advantages over normal degritters.

Disadvantages

1. Operation may not be optimum outside design flow range.
2. Not capable of high levels of treatment.
3. Cannot be modified easily to increase treatment efficiency.

Useful References

1. Drehwing, F. J. (1979). Combined Sewer Overflow Abatement Program, Rochester, NY - Vol II: Pilot Plant Evaluations. USEPA Report No. EPA-600/2-79-03 lb, NTIS No. PB 80-149-262.

2. Field, R. (1982). An Overview of the U.S. Environmental Agency's Storm and Combined Sewer Program Collection System Research. Water Res. 16, 859-870.

HIGH-RATE FILTERS

Description

High-rate filters (HRF) for CSO treatment are usually dual-media, with sand and anthracite, for example, in a deep column. Accumulated solids on the surface and in the bed are removed by backwashing. A fine screen precedes the filter to remove suspended solids.

Efficiency

Almost all settleable solids are removed, so efficiency rises for stronger influents. Removal is poor for dissolved solids, so efficiency is low for wastewaters having high percentages of waste in solution. Treatment is enhanced with chemical addition. Chemical contact time is also a factor in treatment efficiency. Chemical coagulants can yield phosphate reductions of 85-97%. In conjunction with primary systems, HRF can provide SS removals of 72-84% without chemicals and 86-92% with chemical addition.

Economics

Capital costs for a HRF plant treating only CSO is 60-65% of the cost of plant treating both dry- and wet-weather flow. Capital cost estimates for a system using polyelectrolytes for a flow of 1,000,000 m^3 /day was $6,300,000 for c. 1978. HRF is competitive with sedimentation for CSO and dual-process treatment, as it requires only 5-7% as much area. For CSO treatment HRF is competitive with both dissolved-air flotation and microstraining processes.

Table CSO-2. Efficiency of a pilot plant using high-rate filters, at Newton Creek, NY, when operating at a flux rate of 16 gpm/ft.

Parameter	Level in influent (mg/l)	Removal (%)
SS	182	61
BOD	136	41
COD	302	42

Advantages

1. Smaller area requirements than for conventional sedimentation.
2. Can be enhanced by chemical addition.
3. Designed for high loading rate.
4. Mesh discostrainers can eliminate a sludge-concentrating step.

Disadvantages

1. Does not remove dissolved material.
2. Constant pressure head needed to avoid breakthrough of solids.
3. Backwash sludge must be handled and disposed of.
4. Chlorination of CSO needed to prevent growth on filter media.

Useful References

1. Innerfield, H., and Forndran, A. (1979). Dual Process High-Rate Filtration of Raw Sanitary Sewage and Combined Sewer Overflows. USEPA Report No. EPA-600/2-79--015, NTIS No. PB 296 626/AS.

FLOCCULATION/SEDIMENTATION

Description

Chemicals are mixed with incoming wastewater, which is routed to the flocculation chamber. Here flocs of suspended material form because of chemical action. The flocs then settle to the bottom of a sedimentation basin as flow passes through. Clear overflow leaves the tank, and the bottom layer of sediment is removed separately.

Efficiency

The efficiency of the flocculation/sedimentation (F/S) process is greatly enhanced by chemical treatment. Also, influent SS and overflow rate have significant effects on the percentage of removal. Flocculation/sedimentation tends not to remove much TKN.

Table CSO-3. Efficiency of removal in a flocculation-sedimentation process at a pilot plant in Rochester, NY.

Influent SS (mg/l)	Removal (%) of SS at indicated flow rate (gpd/sq ft)			Removals (%)		
	800	1500	2000	BOD_5	VSS	TIP
No chemical treatment				21	37	8
200	15.9	12.0	10.1			
500	60.9	59.1	58.2			
With polymer treatment				37	47	11
200	53.1	47.6	44.9			
500	77.6	75.0	73.7			
With alum plus polymer				61	79	71
200	78.2	75.4	74.0			
500	89.3	87.9	87.2			

Economics

Capital costs will depend largely on tank volume, which is derived from the quantity of flow treated. Maintenance and operations costs will be mainly for chemicals and the handling and disposal of sludge. However, the use of chemicals to enhance treatment can be very cost-effective. F/S systems are cost-competitive with swirl separator systems, with increasingly stringent treatment requirements favoring F/S systems.

Advantages

1. Adaptability to automated operation.
2. Rapid startup and shutdown characteristics.
3. Good resistance to shock loads, with chemical use.
4. Flexibility of operations with chemical use.
5. Good phosphorus removals attainable with alum use.

Disadvantages

1. High initial cost (offset by reduced land requirements).
2. High chemical requirements.
3. With chemical use, increased sludge.
4. Can have high maintenance requirements.
5. Requires chemical use to avoid sensitivity to high flows and loadings.

Useful References

1. Drehwing, F. J. (1979). Combined Sewer Overflow Abatement Program, Rochester, NY - Vol II: Pilot Plant Evaluations. USEPA Report No. EPA-600/2-79-03 lb, NTIS No. PB 80-149-262.

2. Field, R. (1982). An Overview of the U.S. Environmental Agency's Storm and Combined Sewer Program Collection System Research. Water Res. 16, 859-870.

SCREENING/DISSOLVED AIR FLOTATION

Description

Combined sewer overflow is automatically directed through a small "satellite" plant containing drum screens to remove suspended solids; then chemicals are added before the overflow is directed to flotation tanks. Typically at least 20% of the flow is saturated with air in pressurization tanks before being mixed with the remaining flow upon entering the flotation tanks. Then microscopic air bubbles released from the pressurized portion bring suspended particles to the surface, where they are removed by scrapers. A cleanup cycle after a CSO ensures proper operation during the next discharge.

Efficiency

Full-scale studies in Racine, WI, in the mid-1970's showed that substantial removals are possible with this technology.

Table CSO-4. Efficiency of removal in a screening/dissolved air flotation system in Racine, WI.

Parameter	Removal (%), mass basis	
	Site 1	Site 2
BOD	62.4	69.5
TOC	60.0	66.6
Suspended solids	67.6	69.8
Volatile suspended solids	73.6	67.3
Total phosphorus	53.2	62.4

Treatment efficiency is usually better for long runs (greater volume) than for short runs. A smaller drum screen system without air flotation removed 20% of BOD, 41% of TOC, and 50% of SS.

Economics

Capital costs for full-scale studies in 1974 are shown below.

Table CSO-5. Cost in 1974 dollars of full-scale satellite plant for screening/dissolved air flotation.

Site	Design flow (m^3/day)	Total cost($)	Cost ($)/mgd treatment capacity	Cost ($)/acre of CSO area
Site 1	53,500	436,599	30,900	6,779
Site 2	168,000	841,420	18,950	2,078
Site 3 (screen only)	14,800	25,001	6,410	1,613

Maintenance was the major operations cost for full-scale application of this technology because of the labor necessary for site maintenance and cleanup after an operation. Sludge handling could be expected as a major cost for this technology but was not included in the studies at Racine. This technology is a feasible alternative to combined sewer separation, which is prohibitively expensive, but it can be significantly more expensive than other technologies presently available for CSO control.

Advantages

1. Reliable.
2. Adaptable to automated operation, rapid startup and shutdown, and high-rate operation.
3. Resistant to shock load.

Disadvantages

1. Can be cost-intensive for the treatment received.
2. High maintenance and labor costs.
3. Large equipment requirements, complex machinery.

Useful References

1. Meinholz, T. L. (1979). Screening/Flotation Treatment of Combined Sewer Overflows - Volume II: Full Scale Operation, Racine, WI. USEPA Report No. EPA-600/2-79-106, NTIS No. PB 80-130-693.

ACTIVATED CARBON ADSORPTION

Description

Wastewater is passed through a filter column with activated carbon media. Pollutants are adsorbed in the filter bed and removed from the flow. The filter is cleaned by backwashing. The carbon filters can also be used to polish effluents from flocculation/sedimentation and high-rate filtration systems, and dry-weather flows.

Efficiency

Unlike most CSO treatment technologies, activated carbon adsorption removes significant amounts of dissolved organics. Pilot studies in Rochester, NY, indicated optimum BOD_5 removal at detention times of 20-30 minutes (below).

Table CSO-6. Efficiency of activated carbon adsorption in pilot studies in Rochester, NY.

Influent BOD_5 (mg/l)	Detention time (min)	Flux (gpm/sq ft)	BOD_5 removal (%)
30	13.5	0.42	69
30	19.3	0.61	76
30	30.0	0.94	83
30	45.0	1.41	79
70	13.5	0.42	92
70	19.3	0.61	91
70	30.0	0.94	96
70	45.0	1.41	88

The addition of carbon adsorption to primary treatment processes can result in an overall BOD_5 removal of 92-98%.

Economics

Because of high costs for carbon adsorption, the Rochester study recommends limiting application to locations where it is critical to remove dissolved organics and toxic substances. Capital cost estimates for a flow of one million cubic meters are $45,000,000, over seven times the estimate for a high-rate filter system for the same flow. A major portion of this cost is a result of the construction required for carbon regeneration.

Advantages

1. Effective removal of dissolved organics and toxic substances.
2. Can produce high-quality effluent as a polishing technique.

Disadvantages

1. Cost-effective only where effluent quality is critical and pollutants are present that cannot be removed by other techniques.

Useful References

1. Drehwing, F. J. (1979). Combined Sewer Overflow Abatement Program, Rochester, NY - Vol II: Pilot Plant Evaluations. USEPA Report No. EPA-600/2-79-03 lb, NTIS No. PB 80-149-262.

HIGH-RATE DISINFECTION

Description

Chemicals for disinfection are added to influent, which is mechanically mixed by propellers or baffles in a small mixing basin. Ultraviolet (UV) light and ozonation require different and usually more complex facilities.

Efficiency

High-rate disinfection can achieve large reductions of bacterial populations in CSO's. In Syracuse CL_2 at levels of 12-24 mg/l achieved 3-4 log reductions of fecal coliforms and CLO_2 at levels of 6-12 mg/l reduced levels to 200 counts/100 ml during first-flush loadings. UV light is effective but is affected by turbidity and leaves no residual disinfectant against future contamination. Ozone is a very rapid oxidant and is also an alternative for disinfection of CSO's.

Economics

High-rate disinfection for CSOs can be more cost-effective than normal disinfection. Conventional facilities are operationally cost-intensive, whereas CSO wet-weather facilities are capital-intensive. In pilot studies in Rochester, NY, CL_2 had a lower overall cost than CLO_2 for all trial cases. CLO_2 requires less detention time and mixing but is not cost-effective because of chemical costs. Sequential use of CL_2 and CLO_2 does not seem advantageous. Methods such as ozonation and UV light are too costly in most situations but have advantages. New research includes a UV pilot study with a contact time of 10 seconds.

Advantages

1. May be more cost-effective than conventional disinfection.

Disadvantages

1. Higher chlorine dosages needed than for conventional treatment.
2. Dechlorination of disinfected effluents for high-rate systems may be needed to protect aquatic life in receiving waters.
3. Possible significant formation of chlorinated organics and other refractory residuals, which can be a health concern.
4. Lack of reliable, cost-effective, on-site generation processes.
5. Decentralization may increase maintenance problems.

Useful References

1. Drehwing, F. J. (1979). Combined Sewer Overflow Abatement Program, Rochester, NY - Vol II: Pilot Plant Evaluations. USEPA Report No. EPA- 600/2-79-03 lb, NTIS No. PB 80-149-262.

2. Drehwing, F. J., Oliver, A. J., MacArthur, D. A., and Moffa, P. E. (1979). Disinfection Treatment of Combined Sewer Overflows, Syracuse, New York. USEPA Report No. EPA 600/2-79-134, NTIS No. PB 8-113 459.

NONPOINT SOURCE NUTRIENT CONTROLS

URBAN

- Porous Pavement
- Asphalt with Catchbasins
- On-Line Wet Ponds
- Off-Line Wet Ponds
- Extended Detention Dry Ponds
- Recharge Basins
- Infiltration Trenches
- Surface Sanitation/Street Sweeping
- Marsh Land

AGRICULTURAL

- No-Till Cropland
- Minimum Tillage
- BMP's for Fertilizer
- BMP's for Chemicals
- Animal Waste Facilities
- Vegetated Filter Strips
- Riparian Areas
- Controlled Drainage
- Terraces
- Sod Waterways
- Cost-Sharing Programs
- Other Approaches

POROUS PAVEMENT

Description

Porous asphalt pavement can let water pass through so that runoff can be temporarily stored in the reservoir base course and allowed to percolate through the underlying soil. This porosity is gained by exclusion of most of the fine aggregate from the asphalt mix; the resulting void ratio is much higher than in the conventional asphalt pavements (16% vs. 2-3%). Typically, porous pavement consists of five layers: (1) a sub-base of undisturbed existing soil or, when this does not provide sufficient drainage, an imported or prepared base course (in some cases auxiliary drainage structures may be needed as well); (2) a sheet of filter fabric to prevent soil from piping up into the void spaces of the reservoir course; (3) a reservoir base course of 1-2-inch diameter crushed stone aggregate; (4) a 2-inch thick layer of 0.5-inch crushed stone aggregate to stabilize the surface of the reservoir base course; and (5) porous asphalt surface course designed for specific pavement requirements (usually 2.5 inches is sufficient).

Efficiency

Porous pavements may reduce peak runoff rates by as much as 83%, and have been demonstrated to pass the equivalent of 6 feet of water per hour. Because porous pavements have no outlet as such, and runoff must pass through the soil, treatment is excellent. Removal of solids, nitrogen, and phosphorus is estimated at 90-95%.

Economics

Porous pavement may cost 2.5 times as much as conventional pavements, or only 35% more, depending on the ease of obtaining the asphalt mix. Typical costs might be $55-60/ton vs. $35/ton for conventional asphalt. Cost-effectiveness for nutrient removal, in comparison with extended dry ponds and other BMP's, is good for applications such as commercial shopping centers. Cost may be significantly lower than for conventional pavements because structural drainage systems (i.e., curbs, gutters, and stormsewers) can be reduced or eliminated.

Advantages

1. Provides multiple use of land (parking), and greatly reduces pollutants as well as quantity of runoff.
2. Not damaged by freeze-thaw cycles.
3. Erosion and flood control on overland flow and channel areas.
4. Natural drainage boundaries can be maintained, eliminating construction of new collection and delivery systems for runoff.
5. Eliminates standing water on pavement.
6. Conventional paving equipment may be used.
7. Works over tight soil if provided with drainage through pipes.
8. Natural vegetation can be retained, including trees normally removed from sites of conventional pavement.
9. Groundwater recharge is enhanced.

10. Porous pavements have significantly higher friction coefficients when wet than do conventional pavements, and are 15% more resistant to automobile skids under wet conditions.

Disadvantages

1. Must be maintained by use of a vacuum sweeper and high-pressure hosing with water two to four times a year to retain permeability.
2. Effectiveness reduced when accumulated snow melts and when rain falls on a frozen surface.
3. Existing building codes may require drainage structures not needed for porous pavement, making construction costs prohibitive.
4. Spilled gasoline penetrates further into porous pavement, breaking down the asphalt binder to greater depths.
5. Not cost-effective for smaller sites since asphalt plant must be retooled.
6. Possibility of subsurface pollution for some sites, possibly requiring routing of flow to protect aquifer.
7. More difficult to design.
8. An asphalt temperature of 260^{0} F during installation is important, limiting the distance of a site from the batch plant.
9. Quality control at the asphalt plant is important so that fine particles are filtered out properly.
10. Use can be limited by site soil, slope, depth to groundwater, and distance to drinking wells.

Useful References

1. Diniz, E., Epsey, Hutson & Assoc., Inc., Albuquerque, NM (1980). Porous Pavement: Phase I - Design and Operational Criteria. USEPA Report No. EPA-600/2-80-135, NTIS No. PB 81-104 796.

2. Field, R. (1986). The USEPA Office of Research and Development View of Combined Sewer Overflow Control: Proceedings of Available Technology Workshop, Scientific and Technical Advisory Committee, Chesapeake Bay Project, Arlington, VA.

3. Wiegand, C., Schueler, T., Chittenden, W., and Jellick, D. (1986). Comparative Costs and Cost Effectiveness of Urban Best Management Practices. Proceedings, Urban Runoff Quality - Impact and Quality Enhancement Technology. pp 366-380. B. Urbonas and L. Roesner, Eds. Engineering Foundation Conference. ASCE, 345 East 47th Street, NY, NY 10017.

4. Crafton, S. (1986). Urban Nonpoint Control BMP's. Personal Communication. Virginia Soil and Water Conservation Service.

CONVENTIONAL ASPHALT PAVEMENT WITH CATCHBASINS (Untried Technology)

Description

Conventional non-porous asphalt is placed over the deep stone sub-base that is used under porous pavement with inlet grates to channel water into the reservoir course. Under each inlet grate is a catchbasin with perforated drainpipes to direct water into the storage area. This arrangement should allow sediment and trash to settle into the catchbasin rather than clogging void spaces in the storage area.

Advantages

1. May provide the same benefits of quality and quantity control as porous asphalt, for about half the cost.

Disadvantages

1. Untried technology with no actual cost or performance data.

Useful References

1. Crafton, S. (1986). Urban Nonpoint Control BMP's. Personal Communication. Virginia Soil and Water Conservation Service.

ON-LINE WET PONDS or RETENTION BASINS (Quality improvement, little or no quantity reduction)

Description

Wet ponds are depressions, excavated or natural, which receive runoff. The pond is permanent, retaining some water year-round. It detains runoff, reduces peak flows, and (through sedimentation, physical and chemical interactions, and biological processes) removes suspended and dissolved pollutants, eventually discharging into surface waters.

Efficiency

The amount of pollutants removed can vary substantially because of site-specific factors, such as optimum design of the outlet structure and extent of plant growth. In the table below are influent concentrations and percentage removals from two wet ponds in the greater Washington, D.C. area, and maximum removals from nine wet ponds included in the National Urban Runoff Program.

Table NPT-1. Influent concentrations (mg/l) and percentage removals for wet ponds in the Washington, DC, area and in nine ponds in the National Urban Runoff Program.

	Westleigh		Burke		
Parameter	Influent concentration	Removal	Influent concentration	Removal	NURP Removal
TSS	42.0	87	17.7	37	91
COD	47.7	–	39.8	–	69
TN	2.49	53	2.12	51	60
TP	0.33	70	0.20	59	79

Economics

Large regional or multi-site facilities are favored rather than small on-site facilities. Small sites cost $500-$1500/acre, whereas large multi-site facilities cost approximately $150-$200/acre to build. Maintenance costs are $60-$175/acre for small facilities, and $10-$25/acre for large facilities. For wet ponds roughly 60% of the construction costs will be for excavation, and 20% for the inlet and outlet structures. Costs can vary substantially on a site-specific basis.

Table NPT-2. Average capital costs for wet detention ponds (based on 13 ponds).

Storage volume (cubic ft.)	Construction costs ($)
100,000	56,000
500,000	159,000
1,000,000	249,000

Wet ponds are 27-157% more expensive than dry ponds, and 19-131% more expensive than extended-detention dry ponds. Lower percentages correspond to greater acreage and population density.

Advantages

1. Most effective detention practice for water quality control, particularly nutrient control.
2. Potential for recreation, aesthetic benefits, and water supply.
3. Simple routine maintenance.
4. Economic disadvantage of wet ponds compared with dry ponds declines with increasing volumes.

Disadvantages

1. Appropriate sites are more limited in urban areas than for dry ponds.
2. The best sites for regional basins are often multi-jurisdictional.
3. Difficulty in establishing adequate and acceptable long-term management plans.
4. Problems with safety and liability.
5. Wet ponds take 60% more excavation, on the average, than dry ponds of comparable volume, making them generally more expensive.

Useful References

1. Grizzard, T. J., et. al. (1986). An Evaluation of Stormwater Management Ponds for the Control of Urban Runoff Pollution. Personal Communication. VPI&SU, Manassas, VA.

2. Crafton, S. (1986). Urban Nonpoint Control BMP's. Personal Communication. Virginia Soil and Water Conservation Service.

OFF-LINE WET PONDS/RETENTION BASINS (Quality and quantity control)

Description

Off-line wet ponds rely on infiltration and evaporation, rather than discharge to surface waters, to pass stormwater runoff. These ponds depend on sediment-nutrient-microorganism interactions for nitrogen and phosphorus removals. Ponds of this sort have been used to control runoff pollution at highway interchanges.

Efficiency

Studies in Florida concluded that 99% of the total phosphorus input accumulated in the sediments and 85-90% of the total nitrogen was removed by nitrification/denitrification. The studies also found no pollution hazard to nearby surface or groundwater, and quantity control was frequently 100%.

Economics

Construction and maintenance costs are similar to those of on-line wet ponds, for an equal volume. However, depending on the infiltration rate of the soil, it may be necessary to use a greater storage volume if no discharge to surface waters is sought.

Advantages

1. Flow attenuation, flood and pollution control.
2. Higher removal of metals and nutrients than detention basins.
3. Recharge of groundwater.
4. Simple routine maintenance.

Disadvantages

1. Requires restoration every 10-15 years.
2. May require more excavation than a dry pond.
3. Sites suitable for this type of pond may be unavailable.

Useful References

1. Yousef, Y. A., Thorkild, H. J., Wanielista, M. P., and Tolbert, R. D. (1986). Nutrient Transformation in Retention/Detention Ponds Receiving Highway Runoff. Journal Water Pollution Control Federation. 58, 838-844.

2. Driscoll, E. D. (1986). Detention and Retention Controls for Urban Runoff. Urban Runoff Quality - Impact and Quality Enhancement Technology. Urbonas, B., and Roeser, L. A., Eds.

EXTENDED-DETENTION DRY PONDS (Quality improvement)

Description

An extended-detention dry pond is similar in construction to a more conventional peak-shaving flood-control pond, but usually has a modified outlet, such as a perforated drain that may be covered with gravel, to increase the detention time. This additional time allows suspended solids and their associated nutrients to be removed by settling.

Efficiency

Some research indicates a detention period of 40 hours is needed to remove all particulate matter. A full-scale study of a pond with an average detention time of 6 hours showed removal of 60% of SS, 40% of COD, 15% of total phosphorus, 30% of TKN, and 85% of lead. Settling column studies done with the influent of this pond indicated substantial increases in removals with detention times >24 hours, especially with low-turbidity influents. Data from NURP corroborates these findings, indicating removals >90% for TSS and lead, 65% for total phosphorus, and 50% for TKN, COD, and BOD.

Economics

Storage volume and cost are closely related for any type of detention pond, including extended-detention ponds. Cut-fill expenses account for about 50% of the total cost, and the inlet-outlet structure for a further 33%. Costs can vary substantially on a site-specific basis.

Table NPT-3. Average capital costs for extended detention ponds (from 40 ponds).

Storage volume (cubic ft.)	Construction cost ($)
10,000	6,000
100,000	32,000
500,000	97,000

An extended-detention dry pond will cost 7-11% more than a conventional dry pond, and 16-57% less than a wet pond, the lower percentages in each case corresponding to greater acreage and population density.

Advantages

1. Significant improvement in water quality as well as peak-shaving function of conventional dry ponds.
2. Efficient use of natural topography in conjunction with embankment construction is often sufficient for extended-detention dry ponds, resulting in lower excavation costs than might be expected for a wet pond.
3. No discharge of untreated first flush.
4. Greater removal of pollutants than that obtained with conventional dry ponds.

Disadvantages

1. Trash accumulation (aesthetic and maintenance problem).
2. Longer detention times may keep bottom marshy throughout growing season, impeding mowing and debris removal.
3. Frequent clogging of small outlet orifices (can be alleviated by use of a stone filter jacket covering the outlet).

Useful References

1. Wiegand, C., Schueler, T., Chittenden, W., and Jellick, D. (1986). Comparative Costs and Cost Effectiveness of Urban Best Management Practices. Proceedings, Urban Runoff Quality - Impact and Quality Enhancement Technology. pp 366-380. B. Urbonas and L. Roesner, Eds. Engineering Foundation Conference. ASCE 345 East 47th Street, NY, NY 10017.

2. Crafton, S. (1986). Urban Nonpoint Control BMP's. Personal Communication. Virginia Soil and Water Conservation Service.

3. Grizzard, T. J., et. al. (1986). An Evaluation of Stormwater Management Ponds for the Control of Urban Runoff Pollution. Personal Communication. VPI&SU, Manassas, VA.

RECHARGE BASINS (Quality and quantity control)

Description

Recharge basins can vary widely in size and depth and are designed for total retention and recharge of urban stormwater runoff into the groundwater. The basins, turfed or unturfed, work by retaining run-off and allowing it to percolate through the soil. The soil acts as a filter, decontaminating the water before it reaches the water table.

Efficiency

Soil provides a high degree of contaminant removal. A NURP study of roughly 70 basins in the Fresno area concluded that groundwater quality has not been adversely affected by existing recharge basins, some of which have been in use 20 years. The elimination of runoff discharge to surface waters is high except for very large storm events, and some basins have pump-out capability to canals or other basins. Accumulation of contaminants, particularly lead, on surface soils is significant but with proper maintenance is not considered hazardous unless the soil is ingested. Runoff in the NURP study had nutrient concentrations lower than the groundwater. Effectiveness for an industrial drainage basin is not known.

Economics

Costs should be similar to those for dry basins of the same volume at a given site, with the additional cost of any recreation facilities constructed. However, depending on the percolation rate and the degree of removal desired, the volume required may be greater than that of a dry basin for the same site, since the recharge basin is not intended to be a flow-through facility. Typical construction costs range from 1% to 79% more than for a dry basin at the same site. This technology can be cost-effective for large volumes of runoff from densely populated or heavily paved areas typical of large cities.

Advantages

1. Runoff quality and quantity control approaching 100% where percolation rates are good.
2. Potential use of turfed basins as recreational facilities; inclusion of a shallow basin in the design makes it possible to keep the recreational area dry except in large storms.

Disadvantages

1. Accumulation of lead is a potential health hazard for small children who might accidentally ingest soil.
2. May require significant maintenance after storms, especially for recreational facilities.
3. Disposal of contaminated soil after maintenance can be expensive, especially if there are long periods between clean-ups.
4. Possible eventual soil saturation by contaminants.
5. Requires adequate percolation rate to be practicable.

Useful References

1. Brown and Caldwell, Consulting Engineers. (1984). Fresno Nationwide Urban Runoff Program. Project Final Report.

2. Wiegand, C., Schueler, T., Chittenden, W., and Jellick, D. (1986). Comparative Costs and Cost Effectiveness of Urban Best Management Practices. Proceedings, Urban Runoff Quality - Impact and Quality Enhancement Technology. pp 366-380. B. Urbonas and L. Roesner, Eds. Engineering Foundation Conference. ASCE, 345 East 47th Street, NY, NY 10017.

INFILTRATION TRENCH

Description

Infiltration trenches may be unsupported open cuts with side slopes, vertical-sided trenches with concrete slab cover, or backfilled trenches with coarse aggregate and perforated pipes where side support is necessary. The trench has no outlet, and stormwater exfiltrates through the trench walls, being treated as it moves through the soil, and replenishing the groundwater.

Efficiency

Removal efficiencies should be quite high for phosphorus and nitrogen, as with any technology that relies on soil infiltration. Also, groundwater quality should not be adversely affected for normal urban stormwaters.

Economics

Cost is moderate when a small storage volume is needed, but rises rapidly for larger volumes. Costs are 20% for excavation, 45% for aggregate, and 35% for the outlet structure (perforated pipeline). An infiltration trench is 95% to 267% more expensive than a dry pond of equal volume. For many situations this is the most cost-effective method for either nutrient removal or volume reduction of stormwater runoff.

Table NPT-4. Average capital costs for infiltration trenches (data from seven trenches).

Storage volume (cubic ft.)	Construction cost ($)
1,000	2,100
5,000	5,900
10,000	9,100

Advantages

1. Recharge of groundwater and overflow reduction.
2. Considerable success with this technology in Florida.

Disadvantages

1. May be less cost-effective than other technologies.

Useful References

1. Wiegand, C., Schueler, T., Chittenden, W., and Jellick, D. (1986). Comparative Costs and Cost Effectiveness of Urban Best Management Practices. Proceedings, Urban Runoff Quality - Impact and Quality Enhancement Technology. pp 366-380. B. Urbonas and L. Roesner, Eds. Engineering Foundation Conference. ASCE, 345 East 47th Street, NY, NY 10017.

SURFACE SANITATION/STREET SWEEPING

Description

Street sweeping is the mechanical removal of rubbish and dirt from road surfaces and paved areas. This is accomplished by the metal-brushed street sweepers that are common in the United States, or by newer machines, such as vacuum sweepers, that use different mechanisms but work in a similar manner.

Efficiency

In a study in San Jose, CA, twice-daily cleanings removed as much as 50% of total solids and heavy metals. Also, some modern cleaners such as a modified regenerative-air Tymco street cleaner have shown promise. However, even intense cleaning fails to control organics and nutrients. Nutrients and heavy metals are attached to particles sized <50 μm, which these devices do not remove well. Neither conventional street sweepers nor vacuum sweepers are adequate for improving runoff quality.

Economics

If integrated with other methods, street sweeping may reduce city-wide costs. In a 1977 study about 75% of the costs were for labor, and costs were roughly $14 and one man-hour per curb-mile cleaned.

Advantages

1. Creates a large number of jobs for money spent.
2. Improves paved areas aesthetically, and improves public sanitation and safety.

Disadvantages

1. Inadequate for control of nutrients and heavy metals in runoff.
2. Effectiveness depends on climatic conditions.

Useful References

1. Pitt, R. (1979). Demonstration of Nonpoint Pollution Abatement Through Improved Street Cleaning Practices. USEPA Report No. EPA-600/2-79-161, NTIS NO. PB 80-108 988.

2. Characterization, Sources, and Control of Urban Runoff by Street and Sewerage Cleaning. USEPA Report No. Pending.

MARSH LAND (Wetlands)

Description

A wetland can be any land with water near or above the ground surface, supporting plants adapted to a saturated root zone. The vegetation, microorganisms, and soils of natural or constructed wetlands can be utilized to remove pollutants from wastewater. Distribution is usually done by irrigation pipelines or sprinklers, which carry pretreated wastewater and deliver it over the treatment area. Pretreatment, such as screening, biological treatment, and/or disinfection, is often needed for wetlands application. This method is well suited to polishing treated effluents. Harvesting is recommended for maximum performance.

Efficiency

This technology is capable of reliably providing pH neutralization and some reduction of nutrients, heavy metals, organics, BOD_5, COD, SS, and coliform bacteria. Phosphorus removal depends on vegetative uptake and frequency of harvesting. Removal of heavy metals depends on plant species present. Proper operations are dependent on conscientious management.

Table NPT-5. Efficiency of wetlands for removal (%) for secondary effluent treatment (10-day retention).

BOD_5	TSS	COD	N	Total P	Coliforms
80-95	29-87	43-87	42-94	0-94	86-99

Economics

This process is cost-competitive with other treatment technologies for small communities. Construction costs depend on land cost, distance from treatment facility, design flows, and site conditions. Operation and maintenance costs are relatively low.

Advantages

1. Vegetation removed can be used for composting or methane production.
2. Enclosed systems possible for small flows.
3. Has been used in at least eight locations in the U.S.
4. Low-cost, low-energy system.
5. Can be combined with overland flow system and chemical addition.
6. Reliable from mechanical and performance standpoints with low operation requirements.
7. May enhance nutrient-poor wildlife habitat.
8. Recreational and educational opportunities.

Disadvantages

1. Temperature and thus climate is a major limitation on treatment efficiency.
2. Not suitable for treatment of toxic materials, heavy metals, and herbicides.
3. Impractical for large treatment plants because of large land requirements.

4. Breeding ground for mosquitoes may be created without proper maintenance.
5. Large land requirement.
6. Pretreatment usually needed.
7. Availability of a suitable wetland site is a major factor in determining cost-effectiveness.

Useful References

1. An Emerging Technology: Wetlands Treatment, USEPA pamphlet, September 1983.

NO-TILL CROPLAND (Erosion/sediment control)

Description

No-till cultivation is the planting of crops in a small slit or a punched hole in the soil in order to prevent erosion year-round and minimize spring sediment surges. Normal preparation of the seed bed is not necessary, and cultivation is usually not necessary during crop production. The practice requires that the entire undisturbed cover crop or crop residue be left undisturbed on the soil to reduce runoff and increase infiltration. This practice is effective in dormant grass, small grains, and row crop residues.

Efficiency

This technique can reduce erosion 75-90%, but without proper maintenance and fertilization it may result in high loadings of soluble phosphorus during runoff events. Roughly 90% reduction of sediment loss on loam soil with 8% slope in continuous corn was measured at the University of Guelph. A separate study indicated that the no-till method reduces soil loss by 97%, phosphorus by 87%, and nitrogen by 82%. A third study conducted in 1985 showed 99% reduction of sediment loss, 95% reduction of phosphorus, 90% reduction of nitrogen, and 57% reduction of runoff.

Economics

The effect of this technique on yields depends on the soil type. A potential loss of $7.20/acre has been estimated for fine-textured soils. Costs are less, however, for more favorable soils, and a yield increase of 16% over conventional clean tillage may result for coarse-textured soils. The cost of herbicides, insecticides, and fertilizers is greater for this technique than for conventional methods, but machine fuel requirements are reduced. Labor, fuel, repair, and machine costs can be reduced by about $24/acre per year in comparison with conventional tillage. Cost-sharing programs in Virginia may pay for as much as 65% of the capital costs of adopting no-till farming.

Advantages

1. Reduces runoff, soil erosion, and the associated loss of nitrogen.
2. Crop residues undisturbed on soil surface.
3. Energy savings from reduced labor requirements.
4. Has been used in the U.S. and Canada, and researched at several universities.

Disadvantages

1. Increased loss of soluble phosphorus.
2. Unsuitable for crops that require complete tillage for disease control (e.g., tobacco and peanuts).
3. Increased use of herbicides, insecticides, and fertilizer.
4. Delays soil warming and drying.
5. Can reduce yields under some conditions.
6. Climatic and soil restrictions.
7. Crop residue can take up applied nitrogen, reducing availability to crop.
8. Top 2 inches of soil may be acidic from nitrogen application to soil.
9. Without residue chemical runoff can be worse than with conventional tillage.

10. Soil compaction can be a problem.
11. Nitrogen transport to groundwater may be increased, since reduced runoff means increased water soaking through the soil.

Useful References

1. Givens, F. B. (1986). No-Tillage, Fact Sheet. Virginia Division of Soil and Water Conservation, Richmond, VA.

2. Givens, F. B. (1986). First Annual Report of the Commonwealth of Virginia Chesapeake Bay Nonpoint Source Control Program. Personal Communication. Division of Soil and Water Conservation, 203 Governor Street, Suite 206, Richmond, VA.

MINIMUM TILLAGE

Description

This practice, a variant of no-till cultivation, results in less soil compaction than no-till. It requires that a minimum of 30% residue cover be left on the soil surface.

Efficiency

Soil erosion is roughly 50% of that associated with conventional tillage.

Economics

Fuel, labor, repair, and machine costs are approximately $10/acre per year less than with conventional tillage.

Advantages

1. Reduces runoff, soil erosion, and the associated loss of nitrogen.
2. Crop residues left on soil surface.
3. Energy savings from reduced labor requirements.
4. Has been used in the U.S. and Canada, and researched at several universities.

Disadvantages

1. Increased loss of soluble phosphorus.
2. Unsuitable for some crops.
3. Increased use of herbicides, insecticides, and fertilizer.
4. Delays soil warming and drying.
5. Can reduce yields under some conditions.
6. Climatic and soil restrictions.
7. Crop residue can take up applied nitrogen, reducing availability to crop.
8. Top 2 inches of soil may be acidic from nitrogen application to soil.
9. Without residue chemical runoff can be worse than with conventional tillage.
10. Soil compaction can be a problem.
11. Nitrogen transport to groundwater may be increased, since reduced runoff means increased water soaking through the soil.

Useful References

1. Givens, F. B. (1986). No-Tillage, Fact Sheet. Virginia Division of Soil and Water Conservation, Richmond, VA.

2. Givens, F. B. (1986). First Annual Report of the Commonwealth of Virginia Chesapeake Bay Nonpoint Source Control Program. Personal Communication. Division of Soil and Water Conservation, 203 Governor Street, Suite 206, Richmond, VA.

BEST MANAGEMENT PRACTICES FOR FERTILIZER

Description

Fertilizer BMP's are designed to reduce the amount of phosphorus and nitrogen lost from cropland. These practices can be categorized as dealing with: (1) rates of application, (2) time and method of application, and (3) retention of nutrients on application site.

Efficiency

Optimum use prevents excessive fertilizer from being applied to the soil, reducing the total amount of nutrients available for transfer to surface waters. For nitrogen, applying fertilizer during the times of maximum uptake can make a great difference in the total amount of fertilizer required. Nitrogen uptake is 113 lb/acre during the winter, 142 lb/acre at planting time, and 153 lb/acre when nitrogen is applied as side-dressing. Also, use of nitrification inhibitors can approximately double the yield for a given amount of fertilizer. Phosphorus loss is reduced by measures controlling erosion, since phosphorus is absorbed by soil. Also, soil testing can determine how much phosphorus is needed to increase crop yields, thus preventing excess applications.

Economics

There are direct cost savings for fertilizer since excess usage is avoided. Comparison of the cost of fertilizer with the expected price of the crop being produced should determine the application rate that will yield the maximum net profit. Below are corn responses to the nitrogen application rates.

Table NPT-6. Response of corn crops to rates of nitrogen application for different soil types.

Nitrogen application rate (lb/acre)	Yield (bushels/acre) for indicated soil type		
	Congress	Davidson	Cecil
0	101	65	35
40	133	110	44
80	157	130	50
120	176	140	54*
160	190	146*	56
200	198*	149	56

* Optimal rates for a nitrogen cost of $0.25/lb and a corn price of $2.50/bushel.

Advantages

1. Avoids unnecessary or uneconomical use of fertilizer.
2. Maximum profits.

Disadvantages

1. Possible difficulty in accurate assessment of fertilizer needs.
2. Requires closer supervision.

Useful References

1. Hawkins, G. W. (1986). Crop Fertilization That Will Reduce Pollution of Surface Waters. Land Use and the Chesapeake Bay. Va. Coop. Ext. Svc., Publication - No. 305-003.

BEST MANAGEMENT PRACTICES FOR CHEMICALS

Description

The control of insecticides, fungicides, and nematicides relies on disease and pest management programs that give farmers the information needed for determining how much chemical is necessary to avoid crop destruction. For example, the Virginia Peanut Leafspot Advisory Program is designed so that 85% of the peanut fields in the state lie within 15 miles of a monitoring station. Leafspot advisories are issued daily from June 10 until September 25.

Efficiency and Economics

The Virginia Peanut Leafspot Advisory Program saved farmers an estimated $3.6 million in 1983 by reducing the average number of fungicide applications during the growing season from seven to three. The Predictive Nematode Assay Program of Virginia discovered that only 49% of the fields to be planted to peanuts had enough nematodes to threaten production. Only 15% of corn acreage was found to benefit from nematode control.

Advantages

1. Reduced total use of chemicals.
2. Direct cost savings to farmers.

Disadvantages

1. Requires closer supervision.

Useful References

1. Phipps, P. M. (1986). Managing Fertilizer and Agri-Chemical Use Within the Bay Watershed: Fungicides, Nematicides, and Insecticides. Land Use and the Chesapeake Bay. Virginia Cooperative Extension Service, Publication No. 305-003.

ANIMAL WASTE FACILITIES

Description

Animal waste facilities are designed either for storage and use or for treatment and disposal. The three components of each system are collection, transportation, and storage or treatment. Collection may be accomplished by scraping or washing and flushing. It may also include structures with slotted floors where wastes drop into pits. Transportation varies from system to system but is usually done with cross conveyors, pumps, wagons, or manure spreaders. Storage of waste from cattle usually takes two forms: wet systems and dry systems. Wet storage facilities consist of storage ponds, concrete pits, and above-ground tanks used alone or in conjunction with dry storage. These facilities provide storage for several months, conserving nutrients for land application. A dry storage facility is constructed as a pole barn with retainer walls and a sloping concrete floor. Wastes are scraped frequently and placed in the dry stack contained in the barn. Poultry and swine storage facilities are usually storage ponds or concrete pits. Curbs and gutters are usually needed to prevent rainfall from entering storage. For treatment and disposal of most animal wastes either an anaerobic or an aerobic lagoon is used.

Efficiency

A ton of manure contains 3 lb of phosphorus and 7 lb of potash, with 70-80% of these nutrients available to plants. About 30-40% of the nitrogen in manures is usable by plants during the first year, with the remainder becoming available over the next several years. With fertilizer practices oriented to reducing nutrient removal by runoff, manure can be applied without causing excessive pollution. Anaerobic and aerobic treatment lagoons reduce phosphorus by as much as 90% and nitrogen by 60-90% through settling and biological breakdown. Sometimes efficient nutrient control first requires movement of a facility away from a passing stream.

Economics

Storage systems often require less land area than treatment facilities and can have low construction costs (storage ponds). Storage facilities require scheduled maintenance of the structure and equipment, as well as cleaning. Accumulated solids must be removed every 10-15 years from anaerobic lagoons and more frequently from aerobic lagoons. In Virginia a farmer can receive 75% ($7,500 maximum) of the cost of an animal waste control facility. In 1985 in Virginia the average total cost per facility (for 27 farmers) was $17,760.

Advantages

1. Controls contamination of surface water and groundwater.
2. Maximizes fertilizer potential of animal waste.
3. Storage space gives flexibility to disposal schedule.

Disadvantages

1. Clay-lined livestock lagoons operating below design levels can form cracks, degrading groundwater quality significantly.

2. More expensive than scraping and hauling without storage or treatment facilities.

Useful References

1. Givens, F. B. (1986). First Annual Report of the Commonwealth of Virginia Chesapeake Bay Nonpoint Source Control Program. Personal Communication. Division of Soil and Water Conservation, 203 Governor Street, Suite 206, Richmond, VA.

2. Collins, E. R., Jr. (1986). Overview of BMP's for Controlling Animal Wastes. Department of Agricultural Engineering, VPI&SU, Blacksburg, VA.

VEGETATED FILTER STRIPS (Quality and limited quantity control)

Description

Vegetated filter strips, or grass swales, are areas of close-growing perennial grasses or other vegetation intended to filter pollutants from passing runoff. They may be placed along the shoulders of highways or around the perimeter of fields and animal operations, and have also been used in surface-mined areas.

Efficiency

Suspended material settles well at the source area/filter interface, but overall removal efficiency can be much less dramatic. Filter lengths for 90-95% pollutant reductions in runoff can range from 10 ft to lengths equivalent to the area upslope from the filter. At least in urban settings, results have been poor.

Economics

Installation costs vary considerably from location to location. Farmers are usually eligible for cost-sharing programs. Maryland, for example, pays up to 87.5% of the installation cost through the State Agricultural Cost Share Program. Average annual cost of installation and maintenance in Virginia in 1983 was $51.75/acre. In a 1986 survey in Maryland, costs for clearing averaged $60.51/hour (range, $40-$75/hour), and costs for seeding averaged $435.91/acre (range, $160-$1,750/acre). These costs do not include potential income lost by having acreage in filter strips instead of crop production.

Advantages

1. Reduces slope length, slows runoff velocity, filters soil from runoff, and facilitates adsorption of rain.
2. Infiltration reduces pollutant mass and quantity of runoff.
3. Effective if field is sloped uniformly, promoting sheet flow instead of concentrated flow (often not the case, however).

Disadvantages

1. Data on individual treatment mechanisms insufficient for routine design of adequate filters.
2. Variable effectiveness for pollution control, especially for soluble pollutants.
3. Ineffective for removing sediment and nutrients under concentrated flow conditions, which are common with low-density vegetation.
4. Loses effectiveness with time as sediment accumulates in the filter, unless vegetation grows as fast as sediment accumulates.
5. Does not remove soluble phosphorus effectively, and total phosphorus is not removed as effectively as sediment.

Useful References

1. Magette, W. L. (1986). Vegetated Filter Strips for Runoff Treatment. Proceedings of Available Technology Workshop, Scientific and Technical Advisory Committee, Chesapeake Bay Project, Arlington, VA.

2. Tollner, E. W., Barfield, B.J., Haan, C. T., and Kao, To Yo (1976). Suspended Sediment Filtration Capacity of Simulated Vegetation. Transactions of the ASAE, 19, 678-682.

3. Grizzard, T. J. (1986). Performance of Urban BMP's. Personal Communication. Occoquan Watershed Monitoring Laboratory, Manassas, VA.

4. Scott; C. (1986). Urban Nonpoint Control BMP's. Personal Communication. Virginia Soil & Water Conservation Service.

RIPARIAN AREAS

Description

Riparian areas are timbered areas of vegetation placed between agricultural fields and streams that receive runoff.

Efficiency

Subsurface drainage water passing through a heavily vegetated riparian buffer can lose essentially all of its nitrogen through denitrification. This can be true for buffer areas as narrow as 50 feet. Studies in North Carolina indicate that riparian areas are effective traps for sediment and phosphorus as well.

Advantages

1. These areas intact in many locales.

Disadvantages

1. In some locales, particularly near the coast, these areas do not exist.

Useful References

1. Gilliam, J. W., and Skaggs, R. W. (1986). Management of Agricultural Drainage Water to Minimize Nutrient Inputs to Estuaries and Bays. Land Use and the Chesapeake Bay, Virginia Cooperative Extension Service, Publication No. 305-003.

CONTROLLED DRAINAGE

Description

The degree of drainage and the level of the water table for fields with tile drainage systems or open ditches is controlled by the use of flashboards. Controlled drainage may be used for channelized streams as well.

Efficiency

The amount of nitrate-nitrogen reaching surface water from tiled agricultural fields can be reduced roughly 50% by using controlled drainage. Phosphorus can be reduced under some conditions but may be slightly increased. The following results for control of flow in streams are for only one year but look promising.

Table NPT-7. Effects of maximum control (poor subsurface drainage), intermediate control, and no control (good subsurface drainage) on levels (mg/l) of nutrients, in a North Carolina study.

Nutrient	Maximum control	Intermediate	No control
Nitrate nitrogen	3.7	15.7	32.4
Total nitrogen	13.6	20.0	42.1
Total phosphorus	0.5	0.3	0.2

Table NPT-8. Concentrations of nutrients (mg/l) in controlled stream.

	Nitrate nitrogen			Phosphorus		
Time	Entry	Exit	Change (%)	Entry	Exit	Change (%)
Before control	1.87	2.67	+42	0.02	0.06	+200
After control	2.93	2.06	-30	0.06	0.07	+16

Economics

The structures to control drainage represent a capital cost to farmers, but yields are unaffected or increased by use of these techniques. Water is used more efficiently and can be conserved for crop production. The system can be used for subirrigation by pumping water into the ditch and letting the drainage system distribute the water back through the field. In North Carolina this technology is included in cost-share programs for agriculture.

Advantages

1. Installation of 21 subirrigation and 100 controlled-drainage systems (representing 25,000 acres) in the past two years in North Carolina.
2. Expense may be offset partially or entirely by water use benefits.

Disadvantages

1. Limited phosphorus control.
2. Increased surface runoff and peak discharge.

Useful References

1. Gilliam, J. W., and Skaggs, R. W. (1986). Management of Agricultural Drainage Water to Minimize Nutrient Inputs to Estuaries and Bays. Land Use and the Chesapeake Bay. Virginia Cooperative Extension Service, Publication No. 305-003.

2. Gilliam, J. W., and Skaggs, R. W. (1986). Riparian Areas and Water Management to Control Nonpoint Pollutants. In Effects of Upland and Shoreline Activities on the Chesapeake Bay. C. Y. Kuo, Ed.

TERRACES

Description

Terraces may be bench terraces or broad-based terraces. Broad terraces are a series of shallow terraces constructed on gently sloping land at a suitable spacing along the contour lines. Farm machinery may be used on broad-based terraces. Bench terraces are nearly level strips or steps. In the U.S. parallel terraces (straight terraces) are popular.

Efficiency

Terraces shorten slope length and reduce water velocity so that erosion is controlled. In the U.S. terraces are usually designed to store runoff from a 6-hour storm of ten-year severity and to drain the water in 36 hours. Once terraces are established, overtopping does not cause much damage. Terraces can reduce erosion by 75-90%.

Table NPT-9. Soil losses (kg/hectare) from grass-backslope, tile-outlet terraces in Iowa.

Location	Sediment to ponding area	Soil loss
Eldora	16,390	658
Charles City	6,750	358
Creston	35,000	689
Guthrie Center	7,020	872

Economics

Terracing is included in cost-sharing programs for agriculture in some states. This technology has been evaluated as not being cost-effective for phosphorus removal, and it is much more expensive than practices such as no-till and fertilizer management.

Advantages

1. Reduces erosion.
2. Reduces nutrient pollution.
3. Increases infiltration.

Disadvantages

1. More labor-intensive.
2. Not cost-effective for phosphorus removal.

Useful References

1. Loehr, R. C. (1984). Pollution Control for Agriculture. 2nd Edition, Academic Press, Inc.

2. Moldenhauer, W. C., and Onstad, C. A. (1977). Engineering Practices to Control Erosion. In D. J. Greenland and R. Lal, Eds. Soil Conservation and Management in the Humid Tropics. p. 87. John Wiley & Sons.

SOD WATERWAYS

Description

A sod waterway is a watercourse with a grass cover.

Efficiency

These waterways reduce runoff velocity and gully erosion. Removal efficiencies for nutrients are unknown.

Economics

Sod waterways are included in cost-sharing programs for agriculture in some states.

Advantages

1. Lower initial cost than for underground conduits.

Disadvantages

1. Uses land that could otherwise be used for crops.
2. Necessity of raising planting equipment to cross slows the farmer and increases the chance of planter malfunction.
3. Maintenance problem as a result of increased herbicide use.

Useful References

1. Loehr, R. C. (1984). Pollution Control for Agriculture. 2nd Edition, Academic Press, Inc.

2. Moldenhauer, W. C., and Onstad, C. A. (1977). Engineering Practices to Control Erosion. In D. J. Greenland and R. Lal, Eds. Soil Conservation and Management in the Humid Tropics, p. 87. John Wiley & Sons.

3. Joint Commission on Rural Reconstruction of Taiwan (1977). Soil Conservation Handbook.

COST-SHARING PROGRAMS

Reforestation. Stabilization of croplands and pasturelands by planting of trees can be very effective in reducing erosion. It is included in some cost-sharing programs in the CBDB.

Strip-Cropping. Strips of perennial grasses, legumes, or hay crops are alternated with strips of row crops within a field. This approach reduces slope length, runoff velocity, loss of soil in runoff, and adsorption of rain. Surface runoff can be reduced by as much as 85%. Strip-cropping is included in some cost-sharing programs in the CBDB.

Grazing Land Protection. These practices are included in some cost-sharing programs in the CBDB.

Sediment Retention, Erosion or Water Control Structures. Construction of these devices is included in some cost-sharing programs in the CBDB.

Permanent Vegetative Cover on Critical Areas. Establishment of this cover is included in some cost-sharing programs in the CBDB.

Protective Cover for Vegetable Cropland. Establishment of this cover is included in some cost-sharing programs in the CBDB.

Contour Farming. Contour farming allows water to seep into the soil rather than running off. EPA studies show that this technique reduces runoff of suspended solids by 25-50%, dissolved nitrogen by 25-50%, phosphorus by 55-65%, and pesticides by 20-25%. Cost is typically only a few dollars per acre, mostly for removal of rocks or hedgerows and land preparation. The practice is included in some cost-sharing programs in the CBDB.

Diversions. These structures are included in some cost-sharing programs in the CBDB.

OTHER APPROACHES

Crop Rotation. Crop rotation adds organic matter, reducing production costs. Fertilizer use is reduced and weeds, disease, and insect cycles are disrupted. According to calculations by the Uniform Soil Loss Equation, phosphorus runoff is reduced by 30-75%, and nitrogen runoff by 55-80%.

Innovative Technologies. Aerial seeding of a winter cover crop is one innovative technology that is being tried in the CBDB. This early seeding allows the cover crop to germinate before soybeans or corn are harvested. Use of nitrification inhibitors is another technology, with a cost of about $6/acre. Split and late application of nitrogen for more effective crop utilization is another innovative practice that may improve nutrient control.

POINT SOURCE NUTRIENT CONTROLS

LAND TREATMENT SYSTEMS

- Slow-Rate Systems
- Rapid Infiltration
- Overland Flow
- Wetlands

WASTEWATER TREATMENT PLANTS

- Methanol Denitrification
- Bardenpho System
- RBC Denitrification
- Media Column Denitrification
- Alternating Aerobic/Anoxic Operation
- Oxidation Ditch Denitrification
- Tertiary Chemical Phosphorus Removal
- Simultaneous Precipitation

- The Economics and Performance of Biological Nutrient Removal in Activated Sludge Systems

- Phostrip
- Operationally Modified (Retrofitted) Activated Sludge Systems
- Anaerobic/Oxic (A/O) and Anaerobic/Anoxic/Oxic (A2/O)
- Sequencing Batch Reactors
- University of Cape Town (UCT)
- Modified Bardenpho

SLOW-RATE SYSTEMS

Description

Slow-rate land treatment is the application to land of partially treated wastewater to complete water treatment and to supply nutrients for plants. Farmland, areas such as parks or golf courses, and woodlands may be used. Treatment is accomplished by natural processes as water infiltrates through soil.

Efficiency

This technique is very reliable and produces a high-quality treated water.

Economics

Operating costs are lower than for conventional treatment systems, and crop sale can offset some costs, especially if system is run under the direction of an experienced farmer.

Advantages

1. Conservation of water through use of wastewater for irrigation.
2. Preservation and enlargement of greenbelts and open space.
3. Lower operating costs, better effluent, and lower energy requirements than conventional treatment methods.
4. Little chemical use and sludge production.
5. Good stability and reliability.
6. Maintenance is straightforward and easily fit into the operation routine.

Disadvantages

1. Requires much more land than rapid infiltration systems or biological treatment plants.

Useful References

1. Thomas, R. (1986). Land Treatment Systems. Proceedings, Available Technology Workshop, C. W. Randall, Ed., Scientific and Technical Advisory Committee, Chesapeake Bay Project. Chesapeake Research Consortium, Inc.

2. Lussier, D. (1982). Operation and Maintenance Considerations for Land Treatment Systems. USEPA Report No. EPA-600/s2-82-039.

RAPID INFILTRATION

Description

A rapid infiltration system may consist of nothing more than a set of basins in sandy soil and the means for applying partially treated wastewater to them. Water is treated as it seeps through the soil where it eventually joins the groundwater. Where water is scarce, underdrains or recovery wells are sometimes used to recover and reuse the treated wastewater.

Efficiency

The water quality resulting from this process is better than can be obtained with most technologies for advanced wastewater treatment.

Economics

Cost is much lower than for other land treatment systems, because much less land area is needed for a rapid-infiltration system. The distribution system needed is also simpler.

Advantages

1. Reliable and cost-effective when properly designed and maintained.
2. Smaller land requirement to treat a given flow.
3. Has been used successfully for 40 years in the U.S.; in 1981, 320 rapid infiltration systems were in use or under construction.

Disadvantages

1. Increased design complexity with less favorable site conditions (such as soil fines, impermeable lenses in the soil profile, high water table, large cut-and-fill requirements).

Useful References

1. Thomas, R. (1986). Land Treatment Systems. Proceedings, Available Technology Workshop, C. W. Randall, Ed., Scientific and Technical Advisory Committee, Chesapeake Bay Project. Chesapeake Research Consortium, Inc.

2. Lussier, D. (1982). Operation and Maintenance Considerations for Land Treatment Systems. USEPA Report No. EPA-600/s2-82-039.

3. U. S. Environmental Protection Agency (1984). Land Treatment: Rapid Infiltration. Innovative Technology Pamphlet. USEPA, Washington, DC.

OVERLAND FLOW

Description

Wastewater is allowed to flow as a thin sheet over gently sloped ground that is covered with dense grass. The wastewater flows 30 to 60 meters and is collected at the toe of the slope. Preapplication treatment ranges from screening to secondary treatment.

Efficiency

Overland flow is capable of meeting standards for secondary treatment in the winter and tertiary treatment in the summer. BOD and total suspended solids average 10-20 mg/l and rarely exceed 30 mg/l, even for influents with BOD's >500 mg/l and SS's of >250 mg/l. Nitrogen is reduced 70-90% on a total mass basis, although concentrations may seem high since 20-50% of the water is lost to evapotranspiration and seepage. Clay soils can provide 40-60% removal of phosphorus. Phosphorus removal may also be improved by chemical addition. Bacterial indicators are reduced by 90-99%. At low application rates 80-90% removals of cadmium, nickel, copper, and zinc have been obtained.

Economics

Small systems in particular will benefit from the low costs and energy-saving features of this technology. Availability and cost of land will result in greater economy for small communities.

Advantages

1. Simple, energy-saving operation.
2. Potentially great savings for small communities.
3. May treat raw sewage without sludge production.
4. Can be used to upgrade existing facilities.
5. Considered an alternative technology by the EPA and eligible for financial incentives.
6. Plots have been used continuously for at least 12 years in some cases.
7. Works on slopes at least from 2%-8%.

Disadvantages

1. Effluent from collecting ponds may be high in algae and other suspended solids.
2. Removal efficiency may decline with time in service and varies with site soils.
3. Several months of system conditioning may be needed to attain stable performance.
4. Start-up and operation in winter may present a formidable design challenge.

Useful References

1. Thomas, R. (1986). Land Treatment Systems. Proceedings, Available Technology Workshop, C. W. Randall, Ed., Scientific and Technical Advisory Committee, Chesapeake Bay Project. Chesapeake Research Consortium, Inc.

2. Lussier, D. (1982). Operation and Maintenance Considerations for Land Treatment Systems. USEPA Report No. EPA-600/s2-82-039.

3. Thomas, R. (1986). Overland Flow: A Decade of Progress. Proceedings, Available Technology Workshop, C. W. Randall, Ed., Scientific and Technical Advisory Committee, Chesapeake Bay Project. Chesapeake Research Consortium, Inc.

WETLANDS

Description

A wetland can be any land with water near or above the ground surface, supporting plants adapted to a saturated root zone. The vegetation, micro-organisms, and soils of natural or constructed wetlands can be utilized to remove pollutants from stormwater runoff. The runoff is diverted into a wetlands area which has been constructed or modified to contain the flow for a substantial time (one day or more) without significant short-circuiting. The intent is to encourage removal of pollutants by infiltration, sediment adsorption, and biological action. Harvesting is recommended for maximum performance.

Efficiency

This technology is capable of reliably providing pH neutralization and some reduction of nutrients, heavy metals, organics, BOD_5, COD, SS, and coliform bacteria. The removals in the following table are for a wastewater treatment application, but they also illustrate the potential for reduction of non-point pollution.

Table PT-1. Efficiency of wetlands for removal (%) for secondary effluent treatment (10-day retention).

BOD_5	TSS	COD	N	Total P	Coliforms
80-95	29-87	43-87	42-94	0-94	86-99

Phosphorus removal depends on vegetative uptake and frequency of harvesting. Nitrogen removal occurs by both vegetative uptake and nitrification/denitrification. Removal of heavy metals depends on plant species present. Proper operations are dependent on conscientious management.

Economics

The application of wetlands for non-point pollution control is in its infancy, and few case histories are available. However, several applications have been recently made and information can be obtained from the Occoquan Watershed Monitoring Laboratory, Manassas, VA, as well as the U. S. Geological Survey and Federal Soil and Water Conservation Offices. Construction costs depend on land cost, design flows, and site conditions. Operation and maintenance costs are relatively low.

Advantages

1. Vegetation removed can be used for composting or methane production.
2. Has been used in at least eight locations in the U.S. for wastewater treatment.
3. Low-cost, low-energy, low-maintenance system.
4. May enhance nutrient-poor wildlife habitat.
5. Recreational and educational opportunities.

Disadvantages

1. Temperature and thus climate is a major limitation on treatment efficiency
2. May not be suitable for treatment of toxic materials, heavy metals, and herbicides.

3. Breeding ground for mosquitoes may be created without proper maintenance.
4. Large land requirement.
5. Availability of a suitable wetland site is a major factor in determining cost-effectiveness.

Useful References

1. U. S. Environmental Protection Agency (1983). An Emerging Technology: Wetland Treatment. Pamphlet, USEPA.

2. Occoquan Watershed Monitoring Laboratory (1987). Evaluation of an Artificial Wetlands for Urban Stormwater Runoff Pollution Control, Proposal to the Soil and Water Conservation District. Information from OWML, Prince William Street, Manassas, VA 22110.

METHANOL DENITRIFICATION

Description

This is an activated sludge process operated for nitrogen removal. Denitrification using methanol is accomplished by adding methanol to nitrified mixed liquor in an anoxic zone (oxygen is not present). In this zone the microbial utilization of nitrates and nitrites to oxidize carbon releases nitrogen gas. Typically the denitrification reactor is the third stage of an extended process. In the first stage the breakdown and assimilation of organics converts organic nitrogen into ammonium. The second stage is for the nitrification of ammonium to nitrate. The nitrified effluent of the second stage is then ready for denitrification in the presence of a carbon source (methanol) and an acclimated biomass (activated sludge). The three-sludge system as operated by Mullbarger (1971) is shown in Figure PT-1, along with a description of the various components.

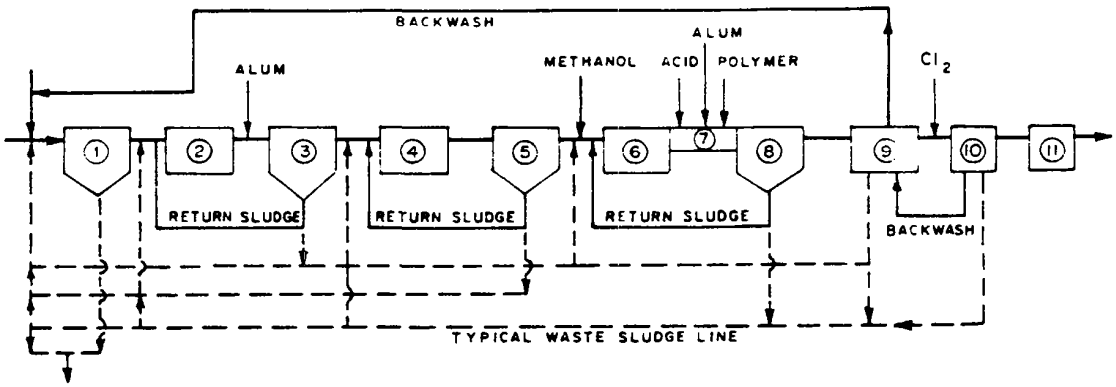

PRIMARY TREATMENT	HIGH RATE ACTIVATED SLUDGE	NITRIFYING ACTIVATED SLUDGE	DENITRIFYING ACTIVATED SLUDGE	POST TREATMENT
(1) SEDIMENTATION TANK	(2) AERATION TANK (3) SEDIMENTATION TANK	(4) AERATION TANK (5) SEDIMENTATION TANK	(6) ANOXIC REACTORS (7) AERATED CHANNEL (8) SEDIMENTATION TANK	(9) MIXED MEDIA FILTERS (10) CHLORINE CONTACT (11) POST AERATION

Figure PT-1.

Efficiency

This process can provide excellent removal efficiencies, particularly for nitrogen (see Table PT-2).

Economics

The costs of this process are almost prohibitive. Retrofit for this method of nitrification/denitrification in a 1 mgd plant serving roughly 8,300 people would entail a capital cost of $1,820,000, an increase in operating and maintenance costs of $260,000, and an increase (100%) of $13.50 a month in the average user fee. Estimates of costs for 25 facility retrofits in the Virginia tidewater were $157,100,000 in capital costs, $15,160,000 in increased operating and maintenance costs, and increases of $5.07 month for the system consumers. Because the process is so structurally intensive, requiring three separate processes, and because costs are high for the addition of methanol, sludge handling, and disposal, neither capital costs nor operating and maintenance costs will be less prohibitive for new plant construction.

Table PT-2. The effluent results of the final four months of the "three sludge" system test at Manassas, VA.

Parameter	Level after final clarification (mg/l)	Level after mixed media filtration (mg/l)
SS	2	0
COD	21	16
BOD_5	4.0	0.8
Total P	0.6	0.3
Organic N	1.0	0.8
NH_4-N	0.0	0.0
NO_2-N	0.0	0.0
NO_3-N	0.8	0.7

Advantages

1. High percentage of nitrogen removed.
2. Relatively stable operation.
3. Each process can be separately optimized.

Disadvantages

1. High capital costs and operation and maintenance costs.
2. Large number of unit processes to operate.
3. Chemicals such as methanol are required.
4. The nitrification/denitrification processes are temperature-sensitive.

Useful References

1. U.S. Environmental Protection Agency (1975). Process Design Manual for Nitrogen Control. Technology Transfer Manual. USEPA, Cincinnati, OH.

2. Mulbarger, M. C. (1971). The Three Sludge System for Nitrogen and Phosphorus Removal. Presented at the 44th Annual Conference of the Water Pollution Control Federation, San Francisco, CA, October, 1971.

3. Report of the Joint Subcommittee Studying The Problems Associated with Nutrient Enrichment and Related Water Quality Standards in the Waters of The Commonwealth, S. D. no.16, 1986 session, Virginia General Assembly.

BARDENPHO SYSTEM

Description

This is an activated sludge system that has been modified for biological nitrogen removal using the influent wastewater as the organic carbon source during denitrification. It can be operated as either a two-reactor or a four-reactor system. The flow diagram for a four-reactor Bardenpho system is shown in Figure PT-2. It can also be operated without the secondary anoxic reactor and the reaeration reactor. Sometimes methanol is added to the secondary anoxic reactor to ensure near-complete removal of nitrates.

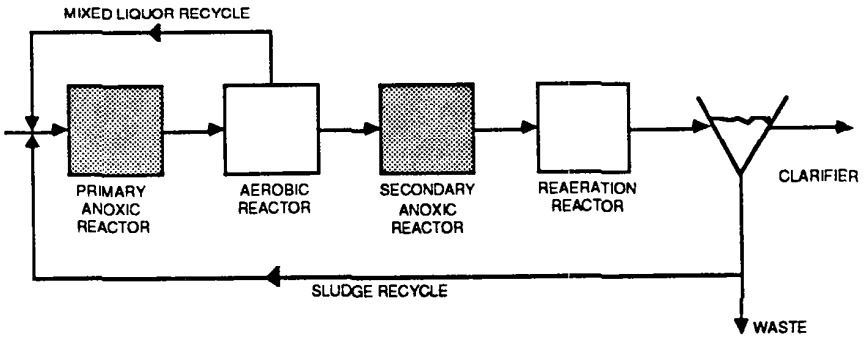

Figure PT-2.

Efficiency

This technology is capable of near-complete removal of ammonium and nitrate nitrogen. It can reduce the total nitrogen in a filtered effluent to <3 mg/l when four reactors are used, and to about 5 mg/l when only the first two reactors are used. Efficiency will be affected by low temperatures but can usually be maintained if the operating sludge age is increased appropriately, except when the weather is especially severe. The efficiency is also a function of the mixed liquor recycle rate. For maximum efficiency, a rate of 4x the influent is used.

Economics

The economics depend on the effluent quality desired. For a two-reactor design, the operating cost can be 20-30% less than that of a completely aerobic activated sludge system that is nitrifying if the mixed liquor recycle rate is 1-2x the influent rate. This design will generally remove 70-80% of the total nitrogen. In a four-reactor design, if the recycle rate is 4x the influent rate and methanol is added for maximum efficiency, the cost of operating can be 50% higher than a completely aerobic, nitrifying system. See Table PT-7 for more information about economics of the system relative to other activated sludge systems.

Advantages

1. Very high removals of nitrogen can be achieved.
2. The percentage nitrogen removal can be varied by changing the method of operation and/or the number of reactors used.
3. The two-reactor system is more economical than a completely mixed aerobic activated sludge system treating the same wastewater flow.
4. The system can be operated efficiently at any sludge age that achieves a high level of nitrification, i.e, a high sludge age does not necessarily reduce the efficiency of nitrogen removal, and frequently will improve it.

Disadvantages

1. A mixed liquor recycle system is required.
2. Use of the four-stage system with methanol addition increases both the capital and the operating costs in comparison with conventional aerobic activated sludge.
3. Good understanding of the processes is more necessary for this system than for conventional aerobic activated sludge systems.
4. Chemical addition for denitrification may be required.
5. Mixers are required for the anoxic reactor(s).
6. This type of system has frequently produced a sludge of poor settleability.

Useful References

1. Walsh, T. K., et al. A Review of Biological Phosphorus Removal Technology, Presented at the Annual Conference of the Water Pollution Control Federation, October 1983.

RBC DENITRIFICATION

Description

A rotating biological contactor (RBC) system is designed so that the rotating discs are completely submerged in the wastewater. The system is then operated to develop anoxic conditions in those units, i.e., nitrates are added along with organic wastewater in the absence of dissolved oxygen. Denitrification depends on microbes attached to the surfaces of the rotating discs. The submerged RBC's may be the final step in an RBC system that is both removing BOD and accomplishing nitrification, or they may be used to denitrify effluent from an activated sludge or other type of biological system accomplishing nitrification.

Efficiency

This type of system should be very efficient for the removal of nitrogen if it is properly operated, i.e., it should accomplish near-complete removal of nitrates. This system has been used by the Radford Army Ammunition Plant, Radford, VA, to treat two wastewaters simultaneously. The wastewater mixture had a TOC concentration of 150 mg/l and a nitrate-nitrogen concentration of 100 mg/l. Nitrate removal was <95%.

Economics

The operating costs of RBC systems are low compared to activated sludge systems when both are treating organic wastewater aerobically. However, denitrification can be used to reduce the power costs for activated sludge, whereas the power costs for RBC's would increase somewhat in submerged operation. An actual comparison is not available, but it is believed the activated sludge system could be operated more economically.

Advantages

1. Existing RBC systems could be easily modified for denitrification.
2. RBC modules can be added to existing biological wastewater treatment plants of any type to accomplish nitrogen removal.
3. RBC plants can be expanded modularly to handle increased flows.
4. RBC systems usually have a low power requirement.

Disadvantages

1. Submerging RBC units increases their power consumption.
2. Submerging RBC units results in a greater loading on the axle and could increase the frequency of failure through axle shear.

Useful References

1. Benefield, L., and Randall, C. (1980). Biological Process Design for Wastewater Treatment, Prentice-Hall, Inc.

2. U. S. Environmental Protection Agency (1975). Process Design Manual for Nitrogen Control, Technology Transfer Manual. USEPA, Cincinnati, OH.

MEDIA COLUMN DENITRIFICATION

Description

Media column denitrification is used to remove nitrogen from either municipal or industrial wastewaters. A source of organic carbon such as methanol or settled sewage is added to the nitrified flow, which is subsequently passed through a column containing a medium, usually sand, activated carbon, or plastic beads. Denitrification depends on microbes that attach to the surface of the medium. Other modifications of this technology also exist, such as columns where the void spaces are filled with nitrogen gas.

Efficiency

Laboratory studies with upflow, packed sand-filled columns yielded average removals as high as 98.9% for a detention time of 2.5 hours. This corresponded to a hydraulic loading rate of 8.7 gpd/ft^2 surface area and a nitrate loading rate of 0.172 lbs/day/ft^3. High removal rates may also be obtained with columns using plastic medium or nitrogen gas/particle medium. Removal depends on media size, loading rate and detention time but is generally efficient and reliable. Jeris (1974) reported 99% nitrate removal with detention times as low as 6.5 minutes. Table PT-3 shows data which illustrate the importance of media size, i.e., the surface area available for microbial attachment. Sand columns also filter suspended solids, typically removing 55-90%. A schematic of a typical design, and a flow sheet showing where it might be inserted in the treatment train are given as Figures PT-3 and PT-4.

Table PT-3. Comparison of nitrate removal rates.

Study	Medium, avg. size	Type of flow	Removal rate (mg/l/hr)
Seidel	1.5 in. gravel	Packed	8.4
Pafford (4)	1.0 in. gravel	Packed	18.0
St. Amant (6)	1.0 in. gravel	Packed	18.0 (avg.)
Tucker et al. (8)	2.36 mm sand	Packed	23.9
St. Amant (6)	1.0 in. gravel	Packed	24.1 (max.)
Parkhurst (5)	1.18 mm act. carbon	Packed	25.0
Tucker et al. (8)	2.36 mm sand	Packed	31.6
Tucker et al. (8)	2.36 mm act. carbon	Packed	38.1
Tucker et al. (8)	2.36 mm sand	Packed	39.1
Tucker et al. (8)	2.36 mm sand	Packed	45.8
Tucker et al. (8)	2.36 mm sand	Packed	51.2
Tucker et al. (8)	2.36 mm sand	Packed	54.7
Jeris (1)	1.7 mm act. carbon	Packed	157.1
Jeris (1)	1.7 mm act. carbon	Packed	166.4
Jeris (2)	0.6 mm sand*	Fluidized	196.6
Jeris (2)	0.6 mm sand*	Fluidized	360.0
Jeris (2)	0.6 mm sand*	Fluidized	833.5 (max.)

*Effective size

Economics

Economics can be quite good. Although these systems can be designed to use methanol, they can also use other carbon sources, including the influent BOD. Use of other sources will greatly reduce operating costs. Also, much smaller structural volumes are required than with normal reactors, because higher concentrations of microbes are possible within the medium.

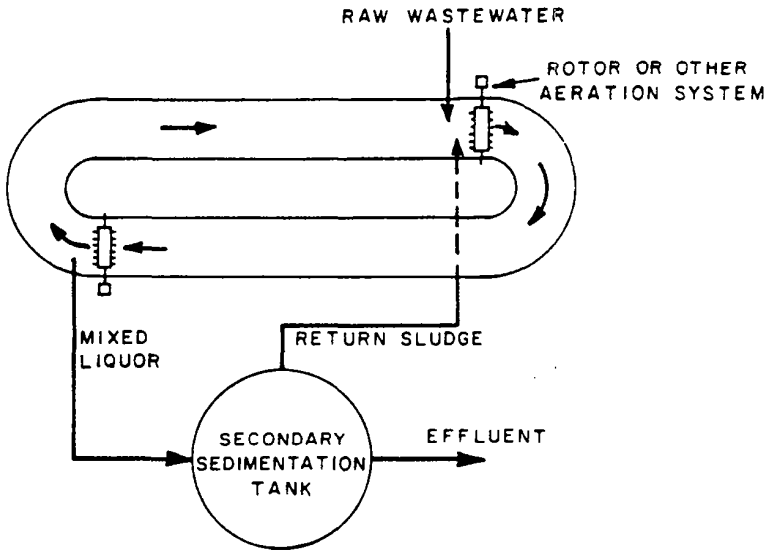

Figure PT-3.

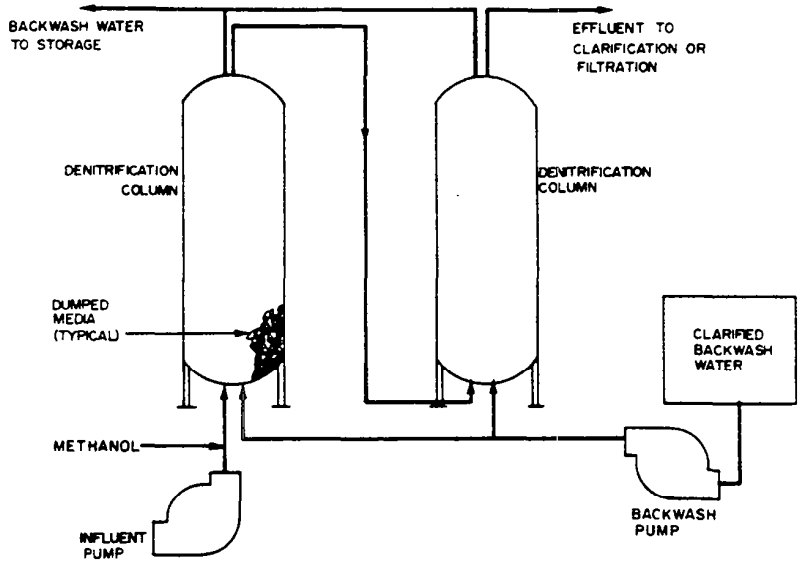

Figure PT-4.

Advantages

1. Very rapid removal of nitrogen is possible because of high biomass concentrations in the column.
2. Small reactor size reduces capital costs.

Disadvantages

1. Microbial growth may cause floating medium with high losses from system during upflow operation.
2. Downflow operation may cause clogging.

Useful References

1. Jeris, J. S., "High Rate Denitrification," presented at the 44th Annual Conference of the Water Pollution Control Federation, San Francisco, CA (October 1971).

2. Jeris, J. S., and Owens, R. W., "Pilot Scale High Rate Biological Denitrification at Nassau County, N. Y., Presented at the New York Water Pollution Control Association Meeting, (January 1974).

3. McCarty, P. L., Beck, L., and St. Amant, P. (1969). "Biological Denitrification of Wastewaters by Addition of Organic Materials," Proc. 24th Industrial Waste Conference, Purdue University Extension Series, 135, 1271.

4. Pafford, R. J., DeFacco, P., and Teerink, J. R. (1971). "Denitrification by Anaerobic Filters and Ponds," Water Pollution Control Research Series, Publication No. 13030 Ely 04/71-8, EPA, Washington, DC.

5. Parkhurst, J.D., Dryden, F. D., McDermott, G. N., and English, J. (1967). "Pomona Activated Carbon Pilot Plant," Journal of the Water Pollution Control Federation, 39, R70.

6. St. Amant, P. P., and McCarty, P. L. (1969). "Treatment of High Nitrate Waters," Journal of the American Water Works Association, 61, 42.

7. Seidel, D. F., and Crites, R. W. (1970). "Evaluation of Anaerobic Denitrification Processes," Journal of the Sanitary Enginering Division, Proc. A.S.C.E., SA2, 96, 267.

8. Tucker, D. O., Randall, C. W., and King, P. H. (1974). Columnar Denitrification of a Munitions Manufacturing Wastewater. Proceedings, 29th Annual Purdue Industrial Waste Treatment Conference, Engineering Extension Series 145, Lafayette, IN. pp.165-175.

9. U. S. Environmental Protection Agency (1975). Process Design Manual for Nitrogen Control. Technology Transfer Manual. USEPA, Cincinnati, OH.

ALTERNATING AEROBIC-ANOXIC OPERATION

Description

Wastewater is treated by this method in a conventional activated-sludge plant with modified operating procedures. The completely mixed activated-sludge system is aerated intermittently instead of continuously. This process creates a cycle of alternating aerobic and anoxic conditions. Conventional oxidation and stabilization of wastes takes place during the aerobic period, and nitrate is denitrified to nitrogen gas during the anoxic period.

Efficiency

Use of this technique can greatly enhance removal of total nitrogen, as well as removal of BOD and possibly suspended solids. Studies conducted at a plant in Australia yielded the results shown below.

Table PT-4. Efficiency of an alternating aerobic/anoxic system at Brushy Creek Plant, Australia.

		Effluent		
Parameter	Influent	CMAS Stage	AAA* Stage	% Reduction
Flow, m^2/day (mgd)	5500(1.45)	2900(0.77)	2600(0.69)	
BOD, mg/l	320	15	7	53
SS, mg/l	198	8.4	4.4	48
TKN, mg/l	63	19.6	2.6	87
NH_3-N, mg/l	44	13.7	0.9	93
NO_3-N, mg/l	0	0	3.0	-
TN, mg/l	63	19.6	6.5	67
TP, mg/l	11	7.2	8.2	(14)

*Air on/off = 2.25/2.75 hour

Similar studies at the Yarra Glen plant in Australia produced reductions in BOD and effluent nitrates in comparison with conventional activated-sludge operation, plus a 35% energy saving (from 3400 to 2200 kWh/quarter) and a 40% reduction in the MLVSS concentration for a schedule of 2 hours on/4 hours off instead of constant aeration. The results are shown in the following table. Data analysis by Randall (1986) has shown that the optimum on/off ratio is a function of the organic loading rate.

Economics

This process should result in reduced operational costs with little or no capital investment. No significant construction is required to adopt this method, and operational costs are reduced for two reasons. First, energy (aeration) requirements are reduced by the use of nitrates for BOD stabilization. Second, less excess sludge is produced because of the reduced efficiency of microbial growth under anoxic conditions. This reduction in turn lowers sludge handling and disposal costs, which are major operating expenses.

Table PT-5. Alternating aerobic/anoxic system at Yarra Glen Plant, Australia.

Parameter (mg/l)	Influent	Effluent				Reduction (%) for 2/4 operation
			Air on/off hours			
		CMAS	3/2	2/3	2/4	
BOD	396	5	7	3	3	40
SS		15	20	15	15	0
TKN	76					
NO_3-N	0	25	20	10	7	72
MLVSS	N.A.	3980	3500	2400	2400	40

NOTE. Flow = 21.2 m^3 (3.9 gpm); period of study was July 1983 through April 1984. Total quarterly energy usage was 3400 kWh for CMAS and 2200 kWh for AAA 2/4; this represents a 35% reduction in energy usage.

Advantages

1. Reduced energy requirements.
2. Less excess sludge.
3. Less nitrogen discharged to surface waters.
4. Operational change is simple, requiring little new equipment and no major structural changes.

Disadvantages

1. Limited full-scale experience in the U.S.

Useful References

1. Ip, S. Y., Bridger, J. S., and Millis, N. F. (1986). Effect of Alternating Aerobic and Anaerobic Conditions on the Economics of the Activated Sludge System, Water Science Technology, Vol. 19, Rio, pp. 911-918.

2. Randall, C. W. (1986). Discussion of "Effect of Alternating Aerobic and Anaerobic Conditions on the Economics of the Activated Sludge System", Department of Civil Engineering, Virginia Tech University, Blacksburg, VA. Water Science Technology, Vol. 19, Rio, pp. 919-921.

OXIDATION DITCH

Description

The oxidation ditch is a variation on the activated-sludge process in which mixed liquor is recirculated continuously through a closed-loop aeration channel. Several aeration techniques may be used. Commonly aerators are staged in series along the aeration channel, subjecting the biomass to a continuing rapid alternation of aerobic/anoxic conditions. Aeration may also be accomplished at a single point, where a barrier forces the entire flow past an aerator. This system permits operation for both aerobic oxidation of wastes and anoxic denitrification.

Efficiency

The efficiency of oxidation ditches for removal of BOD and suspended solids is well documented. Denitrification is also possible with these systems; the facility (2 mgd) in Carrollwood Village, FL, had 84% removal of COD and 97.6% removal of nitrogen, and another (8.9 mgd) in Frankfort, KY, had COD removal of 89% and nitrogen removal of 76%. Both are single-channel systems, and the removal at Carrollwood is done without an anoxic zone. Near-complete removal of nitrogen and enhanced removal of phosphorus can be achieved with this technology.

Economics

Both capital and operational costs of oxidation ditches are often lower than for conventional systems. Capital cost savings come from smaller aeration basins, fewer aerators, and elimination of chemical feeding equipment. Operationally, aeration requirements are reduced, lowering energy costs. Also, the need for expensive chemicals such as methanol for denitrification is eliminated.

Advantages

1. Simple process design and operation.
2. Decreased alkalinity consumption.
3. Reduced need for aeration can increase the capacity of an overloaded facility.
4. Very good process stability.
5. Short-circuiting is reduced by design promoting plug-flow.
6. Enhancement possible by adjustment of oxygenation capacity along the ditch channels, especially in multi-channel ditches, such as the Orbal system.

Disadvantages

1. Construction costs may be high for some systems, particularly for barrier aeration system.
2. Operation at high sludge age slows the rate of denitrification because it results in a very low organic carbon concentration in the mixed liquor.

Useful References

1. Huang, Y. C., and Drew, D. M. (1985). Investigation of the Removal of Organics and Nitrogen in an Oxidation Ditch, Journal Water Pollution Control Federation, 57:151-156.

2. Rittman, E., and Langeland, E. (1985). Simultaneous Denitrification With Nitrification in Single-Channel Oxidation Ditches, Journal Water Pollution Control Federation, 57:300-308.

TERTIARY CHEMICAL REMOVAL OF PHOSPHORUS

Description

After completion of a conventional activated-sludge process, the secondary effluent receives additional treatment to remove phosphorus. Typically this treatment involves the use of a two-step lime reaction, recarbonation, and multi-media gravity filtration. Tertiary treatment as simple as sand filtration could also be used after secondary treatment.

Efficiency

Tertiary systems can meet extremely stringent effluent requirements with proper design and operation. Lime treatment systems at Lake Tahoe, CA, and near Manassas, VA, routinely achieve effluent phosphorus (TP) levels <0.1 mg/l. A tertiary lime system is not, however, a guarantee of meeting design effluent standards. Also efficiency can be adversely affected by equipment failure or by impractical labor requirements for operation.

Economics

Tertiary treatment often implies both high capital costs and high maintenance and operational costs. Total operational costs for a tertiary lime treatment system in Fairfax, VA, with a flow of 19 mgd were $17,148/day. Both capital and operational costs are directly related to the complexity and number of processes constructed for tertiary treatment.

Advantages

1. Suited for stringent standards if well designed and operated.
2. Reliability is increased with additional clarifiers.
3. Retrofit is simple.

Disadvantages

1. High capital, operating, and maintenance costs.
2. May require great technical expertise and labor-intensive operation to meet design effluent standards.
3. High sludge production, and difficulty with sludge disposal.
4. Chance of equipment failure, increasing with complexity.
5. May involve the storage and handling of chemicals such as lime.

Useful References

1. Canham, R., Randall, C., Jenkins, J., and Fry, O. (1981). Full-Scale Evaluation of By-Product Ferric Chloride For Phosphorus Removal and Comparison With Two-Stage Lime Treatment, Presented at the Annual Conference, Water Pollution Control Federation, Detroit, MI.

2. U. S. Environmental Protection Agency (1976). Process Design Manual for Phosphorus Removal. Technology Transfer Manual, No. EPA 625/1-76-001a.

3. Schmidtke, N. (1985). Estimating Sludge Quantities at Wastewater Treatment Plants Using Metal Salts to Precipitate Phosphorus. Proceedings, Phosphorus Management Conference, New University of Lisbon, Portugal. pp. 379-385.

SIMULTANEOUS PRECIPITATION

Description

Chemicals are added directly to the activated sludge of a conventional activated sludge process, usually before the secondary clarifier. These chemicals convert phosphorus to an insoluble form that is precipitated and removed with waste sludge.

Efficiency

Removals of 97% were attained with a total phosphorus effluent concentration of 0.36 mg/l in Fairfax County, VA. Subsequent changes resulted in effluent total phosphorus concentrations of <0.18 mg/l based on routine yearly operation. Most plants in the Great Lakes drainage basin, where this process is used extensively, achieve an effluent concentration of total phosphorus of <1 mg/l.

Economics

Major costs are sludge handling and chemicals, and additional storage and distribution systems. Sludge disposal costs in Fairfax County were $40.89/mg. Retrofitting costs also may involve additional clarifier costs. Conversion of the Fairfax County plant from a tertiary high lime system resulted in a sludge reduction of 28% and an operating cost reduction of $251 per million gallons.

The cost of retrofitting and operating an activated sludge plant for chemical phosphorus removal has been thoroughly researched and presented in the report of McNamee, Porter and Seeley (1986) prepared for the Chesapeake Bay Program. The following table was excerpted from graphs presented in that report.

Table PT-6. Cost estimates (thousands of dollars) for retrofitting plants for phosphorus removal to an effluent level of 1 mg/l.

	Influent phosphorus levels					
	6-10 mg/l			3-6 mg/l		
Costs	10 mgd	5 mgd	1 mgd	10 mgd	5 mgd	1 mgd
Capital cost	170	130	55	160	115	55
Alum and polymer/yr	340	170	35	205	105	20
Life cycle/yr*	350	185	40	220	115	25

NOTE. Numbers rounded to nearest multiple of 5.
*(10% capital cost/yr + alum and polymer/yr).

Advantages

1. Industry by-products such as FeC13 (pickle liquor) can be used to precipitate phosphorus at 50-66% the cost of alum or lime.
2. Retrofit feasible, in many cases easy.

Disadvantages

1. Phosphorus removal to 1.0 mg/l increases sludge mass by an average of 26% at conventional and 40% at primary activated-sludge plants.
2. Chemical storage, feed, and distribution must be provided for.

Useful References

1. Canham, R., Randall, C., Jenkins, J., and Fry, O. (1981). Full-Scale Evaluation of By-Product Ferric Chloride For Phosphorus Removal and Comparison With Two-Stage Lime Treatment. Presented at the Annual Conference, Water Pollution Control Federation, Detroit, MI.

2. McNamee, Porter and Seeley, Inc. (1986). Retrofitting POTWS for Phosphorus Removal in the Chesapeake Bay Drainage Area. Report to the U. S. Environmental Protection Agency, Chesapeake Bay Program, Annapolis, MD.

3. U. S. Environmental Protection Agency (1976). Process Design Manual for Phosphorus Removal. Technology Transfer Manual, No. EPA 625/1-76-001a.

4. Schmidtke, N. (1985). Estimating Sludge Quantities at Wastewater Treatment Plants Using Metal Salts to Precipitate Phosphorus. Proceedings, Phosphorus Management Conference, New University of Lisbon, Portugal. pp. 379-385.

THE ECONOMICS AND PERFORMANCE OF BIOLOGICAL NUTRIENT REMOVAL IN ACTIVATED SLUDGE SYSTEMS

Biological nutrient removal, i.e., the removal of nitrogen and phosphorus from wastewater by biological processes, is both an old and a new technology. For example, the biochemical pathways responsible for nitrification and denitrification, i.e., nitrogen removal, have been known for many years and have frequently been incorporated in designs. However, our concepts concerning the way these processes can be used are changing rapidly. In the past we generally thought of them separately and applied them for the specific goals of oxidizing ammonium and converting nitrates to nitrogen gas. Now there is a growing realization that the joint use of these processes in single-sludge activated sludge systems not only will reduce the nitrogen discharged to the receiving water but also can result in reduced costs of treatment through reductions in the energy requirements and sludge processing costs. This realization will inevitably increase the incorporation of nitrogen removal processes in treatment plant designs, regardless of the need for nutrient control.

Biological phosphorus removal has been the subject of study for the past quarter-century, but the mechanisms and pathways, in contrast to those of nitrogen removal, have only recently been elucidated. In fact, in the 1970's it was generally accepted by the wastewater treatment profession that excess biological phosphorus removal, i.e., the incorporation of phosphorus into bacterial cells in excess of the amount needed for cellular growth, was impossible. It is now known, however, that excess biological phosphorus removal is not only possible, but also easily controlled. Moreover, it can produce an overall treatment system that is both better and more economical than a conventional aerobic activated sludge system. It is superior in that it is more stable, produces better quality effluent, and enhances the incorporation of nitrogen removal into a single-sludge activated sludge system. It is small wonder, then, that a growing number of experts consider completely aerobic activated sludge systems as obsolete for most wastewater treatment applications. The guiding principle is that biological nutrient removal systems should be used because it is technically, economically, and environmentally responsible to do so.

The specific advantages of biological nutrient removal in activated sludge treatment plants can be illustrated by Table PT-7, which compares the relative costs, energy and chemical needs, and sludge production rates of the various designs. A conventional, completely aerobic, single-sludge system is used as the basis for comparison. The factors shown can be multiplied times the corresponding factor for a conventional, non-nitrifying system to obtain a cost estimate, etc., for the specific modification. The table also shows what pollutants each modification is designed to remove.

Table PT-7. Comparison of conventional activated-sludge systems with nutrient-removal activated-sludge systems.

Process	Relative capital cost	Relative energy needs	Relative chemical needs	Relative waste sludge production	Removals achieved			
					BOD	NOD	Nitrogen	Phosphorus
Conventional	1.0	1.0	None	1.0	X			
W/Nitrification	1.2	1.5	None or L*	<1.0	X	X		
W/Two-Stage N removal (methanol)	2.1	1.75	H	1.5	X	X	X	
W/One-stage N removal (influent BOD)	1.1	1.25	None	<1.0	X	X	X	
W/Chemical P removal								
Simultaneous	1.2	1.0-1.5+	M	1.2-1.7**	X	V		X
Tertiary	1.8	1.0-1.5	H	2.0	X	V		X
W/Biological P removal	0.5-1.0	0.8	None	1.0	X	V		X
W/Biological nutrient	1.023++	1.0	None	<1.0	X	X		X

NOTE. This table compares activated sludge treatment options; effluent filtration is not considered. L = low; M = medium; H = high; X = yes; V = variable, depends on operation.

* If alkalinity is low, may require chemical addition for pH control and/or nitrification completion.

+ Variation depends upon extent of nitrification accomplished, i.e., operating sludge age chosen.

** Variation depends upon whether primary sedimentation is practiced; 1.2 to 1.3 with primary sedimentation.

++ CH2M Hill present worth estimate for Lambert's Point plant (50 mgd).

PHOSTRIP

Description

Return activated sludge is diverted to a sidestream anaerobic phosphorus-stripping tank where it is held about 10 hours. Phosphorus released in the stripper passes out in the supernatant, and phosphorus-poor activated sludge is returned to the aeration tank. The supernatant is collected in a separate tank, mixed with lime or another coagulant, and sent to the primary sedimentation tank or to a separate clarifier for sludge separation. Phosphorus is removed in the waste sludge biomass and as a chemical precipitant. Possible designs for the process are shown in Figure PT-5.

Efficiency

A typical efficiency for municipal wastewater is 85% removal of phosphorus, not including additional removal accomplished in other processes in the plant. Process effluent levels of five full-scale Phostrip plants are shown below, and the overall performance for a five-month period is shown for the Adrian, MI, plant.

Table PT-8. Levels of total phosphorus (mg/l) in unfiltered effluent of Phostrip process at five plants.

Plant location	Actual flow/ design (mgd)	Total phosphorus		
		Standard	Average	Typical range
Lansdale, PA	1.5/2.5	0.2	0.7	0.5-2.0
Adrian, MI	5.0/5.4	1.0	1.8	0.2-3.0
Little Patuxent, MD	8.5/15.0	0.3	2.0	1.5-3.0
Reno-Sparks, NE	23.0/30.0	0.5	1.0	0.5-2.0
Amherst, NY	17.0/24.0	1.0	1.7	0.0-3.0

Table PT-9. Levels (g/m^3) of TP, BOD, SS, and NH3 nitrogen in effluents of plant using Phostrip process.

Fluid	TP	BOD	SS	NH_3N
Raw influent	4.5	78	143	16
Primary effluent	4.6			
Plant effluent	0.4	7	4	4

NOTE. Filtered mixed liquor orthophosphate as phosphorus was 0.238 g/m^3.

Economics

The Phostrip process is designed to reduce chemical costs and the associated dewatering and disposal costs of chemical sludge. According to a Canadian study, Phostrip is not cost-competitive with conventional chemical treatment, for either capital costs or operating and maintenance costs. The capital cost for Phostrip is usually a greater economic consideration than the operations cost and is typically independent of influent phosphorus levels. Phostrip will be most cost-competitive when high phosphorus influent levels are expected. Capital cost (including hardware costs and the license fee) for Phostrip at Adrian, MI was

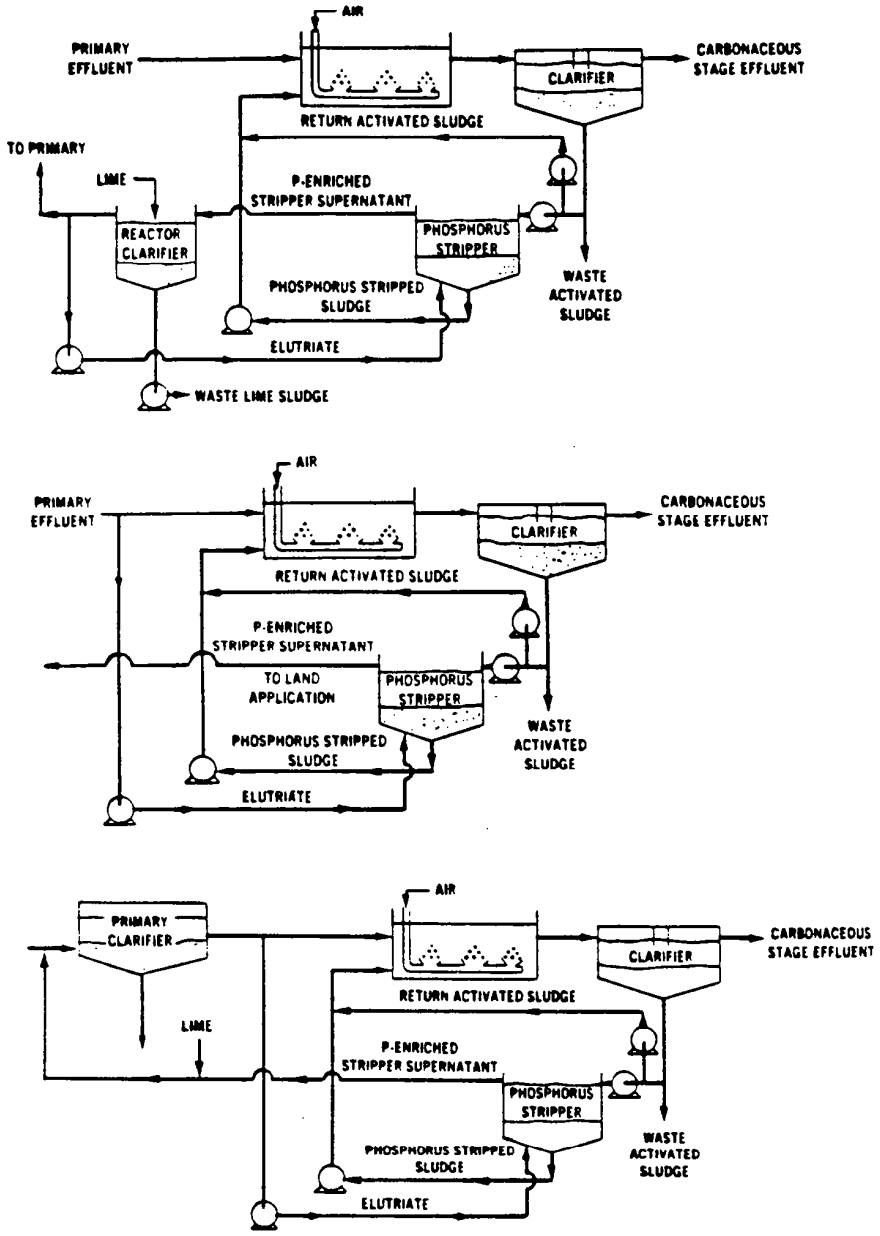

Figure PT-5.

$1,000,000 for the design flow of 7.0 mgd. Retrofit costs are site-specific and include construction of a stripper tank, reactor/clarifier, lime-handling facilities, and the license fee.

Advantages

1. Sludge settles more easily than conventional activated sludges.
2. May aid quick recovery from plant upsets caused by shock loading more than other activated-sludge systems.
3. Less affected by brief hydraulic surges and varying waste strengths than conventional activated-sludge systems, or other biological phosphorus-removal processes.

4. Sludge has higher fertilizer value. Lime sludge may be valuable soil amendment for acidic soils.
5. Chemical consumption lower than for conventional (chemical) options for phosphorus removal.
6. Operational flexibility due to sidestream allows treatment at a lower ratio of BOD_5 :phosphorus than chemical treatment.

Disadvantages

1. Consistent operating technique may be difficult to establish. Requires high level of operational skills.
2. Extreme sensitivity to operating parameters; requires careful labor- intensive monitoring.
3. Large requirements for pump, tankage, and sludge elutriation.
4. Lime (chemical usually used) is difficult to handle.
5. Potential odor problem.
6. Not easily compatible with nitrifying system.
7. Lime scaling in the flocculation/clarifier overflow and elutriation lines causes maintenance difficulties.
8. Susceptible to toxic loads.
9. System start-up difficult.
10. Conflicting needs of activated sludge and Phostrip systems.
11. A proprietary process.

Useful References

1. Tetreault, M., Benedict, A., Kaempfer, C., and Barth, E. (1985). Biological Phosphorus Removal, A Technology Evaluation. Presented at the Annual Conference of the Water Pollution Control Federation, Kansas City, MO. Available from Brown and Caldwell, Inc., Pleasant Hill, CA.

2. Biospherics Incorporated (1986). Phostrip II Process and System Description, 4928 Wyaconda Road, Rockville, MD 20852.

3. Walsh, T., Behrman, B., Weil, G., and Jones, E. (1983). A Review of Biological Phosphorus Removal Technology. Presented at the Annual Conference of the Water Pollution Control Federation, Atlanta, GA. Available from Metcalf & Eddy, Inc., Boston, MA.

4. McNamee, Porter and Seeley, Inc. (1986). Retrofitting POTWS For Phosphorus Removal in the Chesapeake Bay Drainage Area, Report to the U.S. EPA Chesapeake Bay Office, Annapolis, MD.

OPERATIONALLY MODIFIED ACTIVATED-SLUDGE PROCESSES (RETROFITS)

Description

This process usually takes place in a long plug-flow reactor, or possibly in two separate, completely mixed reactors. Basically, an anaerobic zone is created in an operating activated-sludge system. In a plug-flow reactor this is accomplished by not aerating the first portion of the tank. Development of an anaerobic zone allows excess biological phosphorus to be removed. The schematic of such a modification is shown in Figure PT-6. Existing plants can also be modified for both nitrogen and phosphorus removal. A schematic for modifications made to the Hampton Roads Sanitation District's York River Plant is given in Figure PT-7. The design incorporates operating flexibility by making it possible to operate the anoxic zones anaerobically or aerobically, as desired.

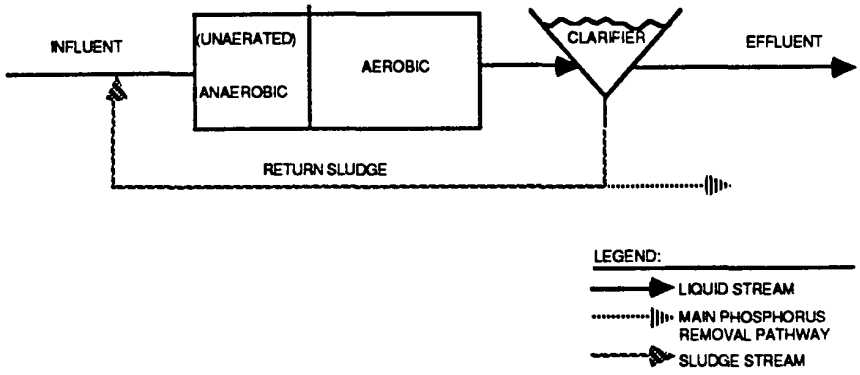

Figure PT-6.

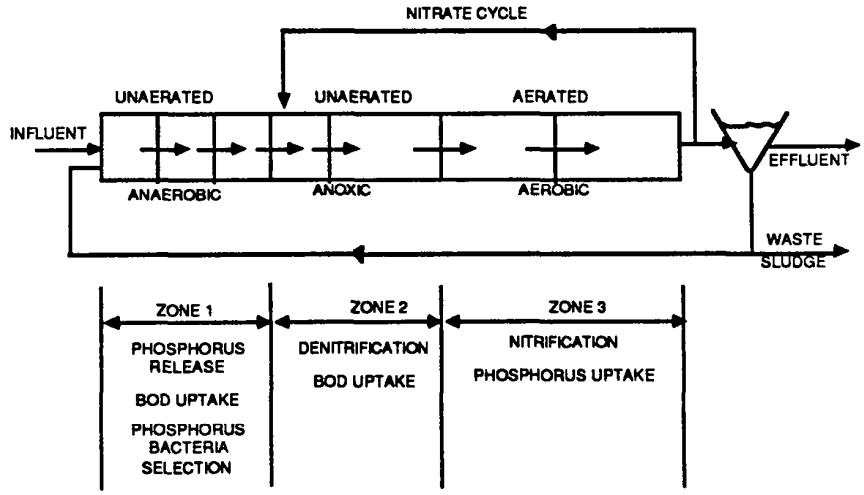

Figure PT-7.

Efficiency

Effluent data for the biological processes of two operationally modified plants are listed below. Both plants are capable of consistently achieving effluent phosphorus levels <1 mg/l under nitrifying conditions without tertiary treatment.

Table PT-10. Concentrations (mg/l) of total phosphorus, nitrogen, and BOD_5 in influents and effluents of two operationally modified activated-sludge plants.

Site	Flow (mgd)	Percentage of design flow	Total phosphorus		Total nitrogen		BOD_5	
			Infl.	Effl.	Infl.	Effl.	Infl.	Effl.
Reedy Creek	4.8	80	6.7	0.9	7.0	5.8	85	3
DePere	3.5	49	5.1	0.3	12.8	8.6	86	7

Economics

This process should result in enhanced removals of phosphorus and nitrogen with little capital investment. Reduced sludge production and energy consumption could also be expected. Two 0.68 million gallon tanks at the York River plant were modified for phosphorus removal at a cost of approximately $50,000 to treat 7 mgd of municipal wastewater. Modification costs for both nitrogen and phosphorus removal were about $110,000. Modifications were performed by sanitary district personnel.

Advantages

1. Increased removals of phosphorus and nitrogen with modest construction and hardware investments.
2. Reduced energy costs for aeration.
3. Can be used with tertiary chemical processes for phosphorus removal to reduce the overall cost of treatment.

Disadvantages

1. Favorable BOD_5:total phosphorus ratios are required to attain low effluent concentrations of phosphorus. Ratios of 20:1 or more to the biological reactor make it possible to obtain effluent TP concentrations <1 mg/l.
2. Total phosphorus concentrations substantially less than 1.0 mg/l usually require chemical co-precipitation or tertiary chemical precipitation.
3. Removal of total nitrogen below 6 mg/l requires tertiary treatment for effluent suspended solids removals.

Useful References

1. Tetreault, M., Benedict, A., Kaempfer, C. Barth, E. (1985). Biological Phosphorus Removal - A Technology Evaluation, Presented at the Annual Conference, Water Pollution Control Federation, Kansas City, MO. Available from Brown and Caldwell, Inc., Pleasant Hill, CA.

2. Randall, C. (1986). Quarterly Reports, York Rivers STP Nutrient Removal Project, Chesapeake Bay Initiatives, State Water Control Board of Virginia.

A/O PROCESS

Description

A typical A/O reactor, when designed only for phosphorus removal, contains an activated-sludge process with anaerobic and aerobic (oxic) zones. For nitrogen removal, an anoxic zone is included between the anaerobic and anoxic zones; this arrangement is known as A2/O process. Detention times may be 1 hour for the anaerobic and anoxic zones, and 1.8-2.5 hours for the aerobic zone, although significantly longer detention times can be used (2.1 hours for anaerobic and 7.7 hours for aerobic at Pontiac, MI). The anaerobic zone is located at the influent end of the reactor; the anoxic and oxic stages follow. The A2 /O process is identical to the three-stage modified Bardenpho process. Flow diagrams for the two modifications are shown in Figure PT-8.

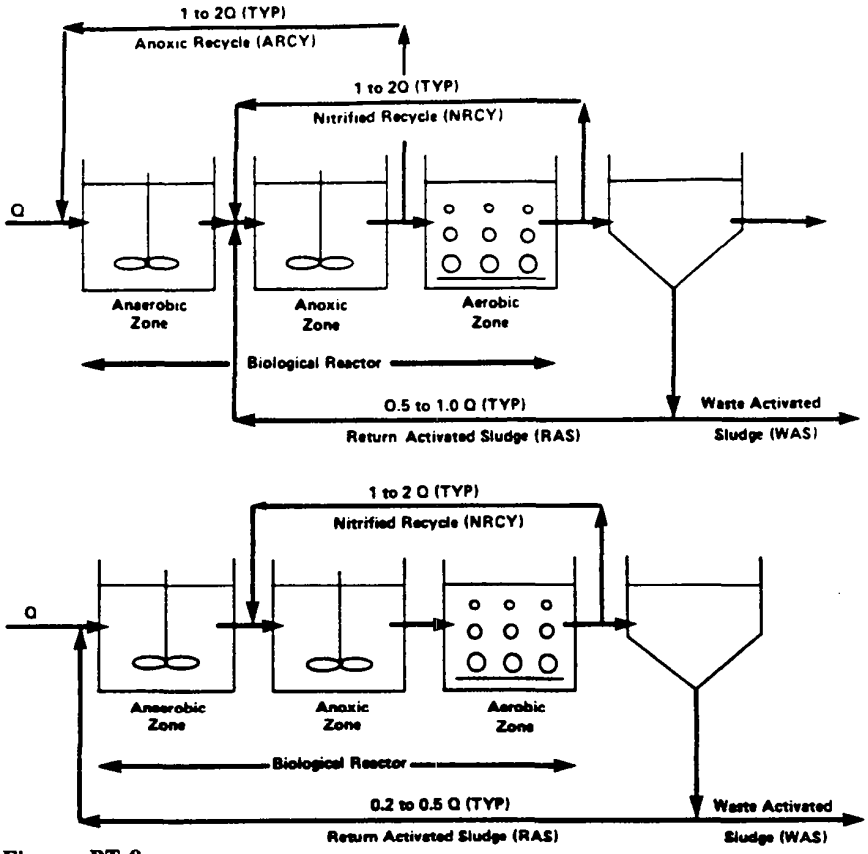

Figure PT-8.

Efficiency

Only three full-scale A/O plants are currently in operation: in Largo, FL, in Pontiac, MI, and on the York River, VA. All are retrofitted plug-flow activated-sludge plants. The Largo plant includes an anoxic zone; the Pontiac plant does not. The York River plant is equipped for anoxic operation, but has not yet been operated in that mode. Below are data from one year of operation at the Largo plant, from two separate periods of 4-6 weeks at the Pontiac plant, and four months at the York River plant. The York River plant has primary clarification and filtrate recycle from belt filter presses processing anaerobically digested sludge.

Table PT-11. Concentrations (mg/l) of total phosphorus, BOD, and SS in influent and effluent at two plants using A/O processes.

		Total phosphorus		BOD		SS	
Location, year	Flow (mgd)	Infl.	Effl.	Infl.	Effl.	Infl.	Effl.
Largo, 1981-82	3.2 *	–	1.5-2.5+	--	4-8	--	10-26
Pontiac, 1984	2.86	3.7	0.9	163	9.4	140	7
Pontiac, 1985	4.28	2.6	0.7	136	11	136	10
York River, 1986	6.18	9.4	2.5	200	14	201	7

*Design flow.

+Average effluent concentration of phosphorus at the Largo plant in a recent performance test was 1.85 mg/l; influent concentration was 8.9 mg/l.

A pilot A/O system in Rochester, NY, with influent levels (mg/l) of PO_4 phosphorus and NH_3 nitrogen of 7.5 and 16.9, respectively, achieved effluent levels of 0.38 and 0.5, respectively.

Economics

Retrofit is easiest in plug-flow activated-sludge plants, but can be adapted to most types of activated-sludge processes. Capital cost for retrofit is less than for Phostrip or Bardenpho, because less reactor volume is needed. A Canadian study concluded that, on the basis of total annual costs, A/O was more cost-effective than chemical precipitation, whereas Bardenpho, UCT, and Phostrip were not. Retrofit costs in 1984 for the Pontiac A/O plant totalled $57,000. Sludge-handling costs are lower than for chemical treatment, because less sludge is produced. Also, energy savings can be realized since less aeration is necessary, and the cost of methanol is eliminated where denitrification is used. A/O is a proprietary process so a licensing fee is necessary. Some estimates claim that, depending on the size of the plant, life-cycle costs may be 40-45% less than costs for conventional chemical treatment. Whereas capital costs and operating and maintenance costs for a conventional 10 mgd plant are $5.48 million and $872,000, respectively, for an A/O plant these costs are $3.81 million and $322,000.

Advantages

1. Retrofit is relatively easy and often cheaper than for other biological processes for phosphorus removal.
2. Relatively simple operation.
3. High-phosphorus sludge has fertilizer value.
4. Short hydraulic detention time reduces capital costs for tankage.
5. Nitrification possible with slight reduction in phosphorus removal and no need for methanol.
6. Fewer clarifiers than multi-stage systems for nitrogen removal.
7. Lower quantities of chemicals used than with conventional techniques; also lower operating and maintenance costs.
8. Sludge has good settling characteristics, and less is produced than with chemical treatment.
9. Potential energy savings via anaerobic stabilization.
10. High rate stability.
11. Alkalinity is returned to flow by denitrification.

Disadvantages

1. May be incapable of simultaneously meeting truly stringent nitrogen and phosphorus standards, even with effluent filters, without chemical treatment in addition.
2. Requires high BOD:phosphorus ratio to produce sufficient cell mass.
3. High-rate oxygen transfer device may be required in oxic stage because of short hydraulic retention time.
4. Limited control flexibility.
5. Responses to hydraulic surge and waste strength, and degree of control and dependability may not be as good as with other biological processes for nutrient removal.
6. Limited experience with full-scale plants.
7. Cold-temperature nitrification rate governs maximum operating rate of process.

Useful References

1. Walsh, T. K., et al. A Review of Biological Phosphorus Removal Technology, Presented at the Annual Conference of the Water Pollution Control Federation, October, 1983.

2. Randall, C. (1986). Quarterly Report No. 2, York Rivers STP Nutrient Removal Project, Chesapeake Bay Initiatives, State Water Control Board of Virginia.

3. McNamee, Porter and Seeley, Inc. (1986). Retrofitting POTWS For Phosphorus Removal in the Chesapeake Bay Drainage Area, Report to the U. S. EPA Chesapeake Bay Office, Annapolis, MD.

4. Tracy, K. (1986). Biological Nutrient Removal. Proceedings, Available Technology Workshop, C. W. Randall, Ed., Scientific and Technical Advisory Committee, Chesapeake Bay Project, Chesapeake Research Consortium.

SEQUENCING BATCH REACTORS

Description

Sequencing batch reactor (SBR) systems consist of aeration basins that receive primary effluent, typically on an alternating fill-and-draw basis, with the batches of wastewater being submitted to a cycle of alternating conditions. These conditions determine the type of treatment that the wastewater receives. After the treated effluent is removed and the waste sludge drained off, the treatment cycle is repeated with a new batch. This type of system is easily adaptable to small (less than 1 mgd) municipal flows, but can be used for larger flows as well.

Efficiency

Secondary quality effluent should be possible at loadings comparable to continuous-flow processes. A laboratory-scale SBR operated for the removal of nitrogen obtained a 94% reduction in ammonia and oxidized nitrogen. Phosphorus removals of 93% have been obtained. Full-scale operations at Culver, IN, yielded 88% removal of phosphorus and 89% removal of nitrogen simultaneously. Average effluent concentrations for the Culver plant were 0.3-1.7 mg/l for NH_3 nitrogen, 0.4-1.7 mg/l for NO_3 nitrogen, and 0.3-1.0 mg/l for total phosphorus. Effluent nitrogen levels <2 mg/l have been achieved there during both summer and winter. Effluent SS and BOD_5 levels of 10 mg/l are easily reached.

Economics

Cost data for SBR systems are limited. However, SBR systems should be highly economical for many small-scale plants. As higher wastewater volume increases tank size requirements, SBR's will become increasingly expensive and impracticable for large flows, and other technologies will prove more cost-effective for nutrient removal. SBR systems operating for nutrient removal can also save substantial energy through reduced aeration requirements.

Advantages

1. Effluent meeting secondary treatment standards can be produced by an SBR at loadings comparable with continuous-flow processes.
2. Can be operated with reduced aeration requirements.
3. Nitrification and denitrification can be achieved simultaneously.
4. The environmental conditions of the mixed liquor are easily controlled.
5. Well suited to automation.
6. Biological phosphorus removal is readily achieved.
7. Highly flexible in operation.

Disadvantages

1. Difficulty of operation increases with higher loadings.
2. If flow quantity exceeds the capacity of the system, it may be necessary to use continuous flow temporarily.
3. Requires duplicate tanks for alternate treatment.

Useful References

1. Irvine, R., Ketchum, L., Breyfogle, R., and Barth, E. (1983). Municipal Application of Sequencing Batch Treatment. Journal Water Pollution Control Federation, 55: 484-488.

2. Palis, J., and Irvine, R. (1985). Nitrogen Removal in a Low Loaded Single Tank Sequencing Batch Reactor. Journal Water Pollution Control Federation, 57: 82-86.

3. Manning, J., and Irvine, R. (1985). The Biological Removal of Phosphorus in a Sequencing Batch Reactor. Journal Water Pollution Control Federation, 57: 87-93.

4. Irvine, R., Ketchum, L., Arora, M., and Barth, E. (1985). An Organic Loading Study of Full-Scale Sequencing Batch Reactors. Journal Water Pollution Control Federation, 57: 847-853.

UNIVERSITY OF CAPE TOWN (UCT) NUTRIENT REMOVAL PROCESS

Description

The UCT process consists of three reactors, anaerobic, anoxic, and aerobic, in sequence. Its modified form includes a second anoxic reactor between the anaerobic and aerobic reactors. The process is designed to removed both phosphorus and nitrogen as wastewater flows through. The UCT process differs from the three-stage modified Bardenpho process or A2/0 process in that the settled sludge recycle returns to the anoxic reactor for denitrification, with biomass being recycled out of the anoxic zone to the anaerobic reactor. This system reduces or excludes nitrates from the anaerobic reactor to enhance excess biological phosphorus removal. A concept flow diagram is shown in Figure PT-9. It was originally conceived as a modification to the Modified Bardenpho

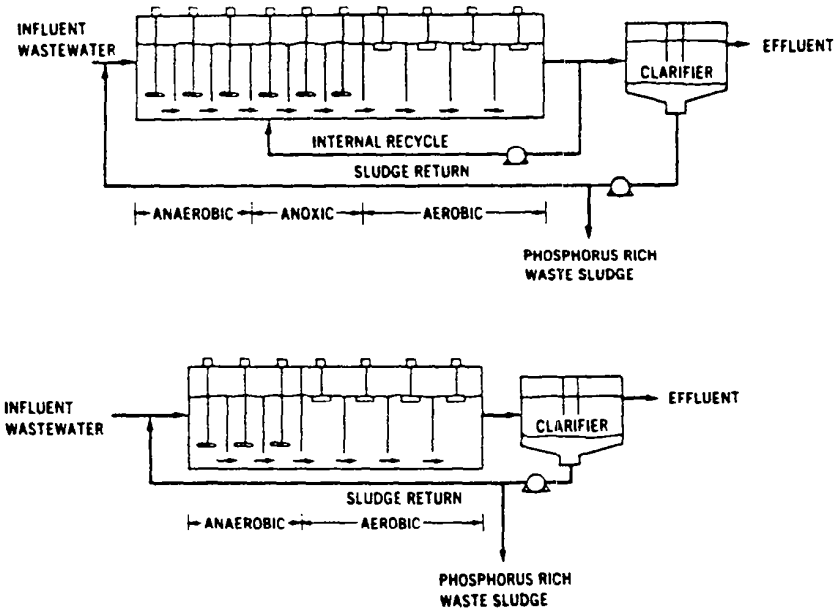

Figure PT-9.

process and was designed with long hydraulic retention times (10-12 hours) and operated at high sludge ages (20 days). Research demonstrations, however, have shown that it can be operated very economically as a high-rate system (sludge age 5-10 days) with a short hydraulic retention time (6 hours). The high-rate concept was developed through pilot plant studies for the Virginia Initiative Plant (VIP) at the Hampton Roads Sanitation District's Lamberts Point Plant in Norfolk, VA. The process schematic for this plant is given in Figure PT-10.

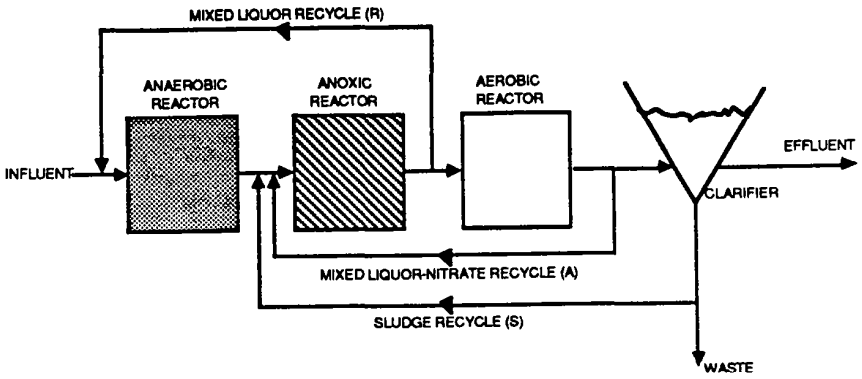

Figure PT-10.

Efficiency

This process is capable of high removals of both phosphorus and nitrogen. Below are some of the results of the high-rate UCT-type Virginia Initiative Plant pilot study.

Table PT-12. Average levels (mg/l) of BOD, total phosphorus, and total nitrogen in influent and effluent of Virginia Initiative Plant, 22 July - 18 August 1985.

	BOD		Total phosphorus		Total nitrogen	
Flow	Influent	Effluent	Influent	Effluent	Influent	Effluent
1.8 gpm	132	3	4.90	0.66	24.17	7.12

The same study showed similar performance under winter conditions for this process. Effluent phosphorus levels of <1.0 mg/l and nitrogen levels of <8 mg/l were achieved with this process under a variety of operating conditions. It was also demonstrated that this system was capable of producing waste activated sludge with an average phosphorus content, on a dry weight basis, in excess of 13% over a period of one month.

Economics

A Canadian study concluded that operating and maintenance costs for phosphorus removal in the UCT system would be less than costs for a chemical system. Capital costs were substantially higher, however, resulting in higher overall annual costs than a conventional system for both retrofit and new systems (but this study was using the original design concept). Nevertheless, because of the prohibitive capital, operating, and maintenance costs for nitrogen removal by methanol addition or other conventional methods, the UCT system is probably more cost-effective than conventional systems for overall nutrient control.

The high-rate VIP modification was developed to satisfy criteria requiring significant levels of biological nutrient removal at a cost comparable to that of secondary treatment. To accomplish this goal, the biological system was sized to provide the same biological reactor volume as required for a conservatively sized aerobic activated sludge system, but with anaerobic, anoxic, and aerobic zones. The pilot plant study was very successful and the information obtained has been used to design a 50 mgd plant. A cost comparison of the VIP nutrient

removal system, with and without primary treatment, and both conventional aerobic and pure oxygen activated sludge systems is given in Table PT-13.

Table - PT-13. Present worth analysis of Lamberts Point upgrade and expansion alternatives, based on construction of a 2.19 m^3/sec (50 mgd) treatment plant.

	Alternatives			
	With primary treatment			No primary treatment
Present worth	Conventional activated sludge	High purity oxygen	Nutrient removal	Nutrient removal
Capital cost	$ 91,120,000	$ 95,126,000	$ 94,345,000	$ 91,609,000
Annual cost	36,953,000	37,373,000	36,667,000	40,835,000
Replacement cost	6,972,000	7,279,000	7,219,000	7,009,000
Salvage	6,480,000	6,765,000	6,709,000	6,514,000
Total	$128,565,000	$133,013,000	$131,522,000	$132,939,000
Ratio of present worth to conventional activated sludge alternative	1.000	1.035	1.023	1.034

Advantages

1. Less excess sludge than with conventional activated sludge or chemical nutrient control.
2. Substantial energy savings with biological removal of both phosphorus and nitrogen.
3. Little or no need for expensive chemicals such as methanol and lime.
4. Phosphorus removal is probably more stable and less subject to changing TKN:COD ratios than with modified Bardenpho.
5. Phosphorus removal capability is superior to both modified Bardenpho and A/O systems.
6. Not a proprietary technology.

Disadvantages

1. May require chemical addition or some form of additional treatment to meet effluent nitrogen and phosphorus standards below 5 and 0.8 mg/l, respectively.
2. No full-scale experience in the U.S.
3. May not achieve as complete a denitrification as modified Bardenpho.

Useful References

1. Water Research Commission (1984). Theory, Design and Operation of Nutrient Removal Activated Sludge Processes, Water Research Commission, P.O. Box 824, Pretoria, 001, Republic of South Africa.

2. CH2M Hill, Inc. (1987). Final Report, Virginia Initiative Plant Pilot Plant Program, Hampton Roads Sanitation District, Virginia Beach, VA.

MODIFIED BARDENPHO (Phoredox)

Description

The modified Bardenpho process is a multi-staged activated-sludge process, consisting of an anaerobic zone followed by alternating anoxic and aerobic zones, having a detention period of 12-21 hours. Its purpose is to reduce the effluent cconcentrations of both nitrogen and phosphorus to very low levels. Internal recycle pumps typically run at about 400% of the raw wastewater flow, returning nitrates from the first aerobic zone to the first anoxic zone for denitrification. The sequencing of an anaerobic zone before the anoxic and aerobic zones is a modification of the original Bardenpho process that enhances excess biological phosphorus removal. A typical process flow diagram is given in Figure PT-11.

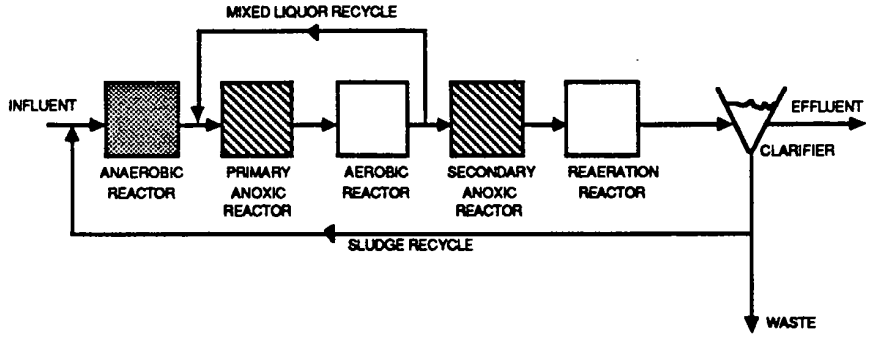

Figure PT-11.

Efficiency

The modified Bardenpho process is capable of producing consistently good effluent quality. In Kelowna, British Columbia, total phosphorus has been consistently 0.15-0.6 mg/l, with total nitrogen <4 mg/l. Effluent from a 40 mgd plant in South Africa had average total phosphorus concentrations of 0.66 mg/l, and nitrogen concentrations of 2.78 mg/l. Below are data from a seven-month period for the modified Bardenpho process in Palmetto, FL.

Table PT-14. Concentrations (mg/l) of phosphorus and nitrogen in influent and effluent of the Palmetto plant using the modified Bardenpho process.

Phosphorus			Nitrogen		
Influent	Effluent	Removal (%)	Influent	Effluent	Removal (%)
6.6	2.1	68	20.3	1.6	92

The process can function with low- or high-strength wastes and in cold climates with proper design and operation.

Economics

The Bardenpho process will generally have a greater capital cost than chemical precipitation in retrofit situations, as will most technologies for enhanced biological phosphorus removal, but operating and maintenance costs will be lower. There are energy savings because of reduced aeration, and sludge handling and chemical costs are lower. The cost of methanol for denitrification is also

eliminated. According to a Canadian study, however, when total annual costs, including the financing of the capital costs, are compared, the Bardenpho process is less cost-effective than chemical removal both in retrofit situations and for new facilities. This is because of the long hydraulic retention times normally used for design.The economics can be enhanced by combining the process with chemical treatment. This process is economically favored by stringent phosphorus and nitrogen standards and elevated chemical costs.

Advantages

1. Produces less sludge than other biological phosphorus removal systems; sludge has a high fertilizer value.
2. Can reduce total nitrogen to lower levels than for other biological phosphorus removal systems and shares the advantage that methanol is not required.
3. Alkalinity return due to denitrification reduces the need for chemical adjustment of alkalinity in nitrifying portions of the system.
4. Significant operating experience in South Africa and more than 40 plants worldwide.
5. Requires fewer clarifiers than a multi-stage system for nitrogen removal.
6. Low-rate design maximizes nitrogen removal.

Disadvantages

1. Increased pumping power and maintenance needs due to large internal recycles.
2. Very strict nitrogen and phosphorus limitations may necessitate chemical addition.
3. Requires more reactor volume than the A/O process.
4. Primary settling may reduce ability of Bardenpho to remove nitrogen and phosphorus, because of decreased BOD.
5. A COD:TKN ratio of roughly 12:1 may be needed to achieve good denitrification.
6. High BOD:phosphorus ratios may be needed for a high degree of phosphorus removal.
7. Flexible design important for consistent results.
8. Cold-temperature nitrification rate governs maximum operating rate of process.

Useful References

1. Walsh, T. K., et al. A Review of Biological Phosphorus Removal Technology, Presented at the Annual Conference of the Water Pollution Control Federation, October 1983.

2. Oldham, W. (1984). Full-Scale Optimization of Biological Phosphorus Removal at Kelowna, Canada. Department of Civil Engineering, University of British Columbia, Vancouver.

3. Oldham, W. (1985). Three Years of Operating Data With the Kelowna Bardenpho Plant. Department of Civil Engineering, University of British Columbia. Vancouver, B. C. Canada.

4. Barnard, J. (1982). Design Consideration Regarding Phosphate Removal in Activated Sludge Plants. Proceedings, IANPR Post Conference Seminar on Phosphate Removal in Biological Treatment Processes, Pretoria, South Africa. Available from Pergamon Press, London, England.

SCIENTIFIC AND TECHNICAL ADVISORY COMMITTEE
CHESAPEAKE BAY PROGRAM

Dr. Maurice Lynch, Director
Chesapeake Research Consortium
STAC Chairman

Dr. Archie McDonnell, Director
Environmental Resources Research Institute
Pennsylvania State University

Dr. Louis Sage, Vice President
Environmental Research
Academy of Natural Sciences of Philadelphia

Dr. Ian Morris, Director
Center for Environmental &
Estuarine Studies
University of Maryland
Alternate: Dr. Wayne Bell

Dr. Lamar Harris, Director
Agricultural Experiment Station
University of Maryland
Alternate: Dr. Alan Taylor

Dr. Gordon Smith, Manager
Environmental Programs
Applied Physics Laboratory
The Johns Hopkins University

Dr. Dennis Powers, Acting Director
Chesapeake Bay Institute
The Johns Hopkins University

Dr. Frank O. Perkins, Dean/Director
Virginia Institute of Marine Science
School of Marine Science
College of William & Mary

Dr. Clifford W. Randall
Department of Environmental Engineering
Virginia Polytechnic Institute and
State University

Dr. William Rickards, Director
Virginia Sea Grant College Program
University of Virginia

Dr. William Dunstan, Chairman
Department of Oceanography
Old Dominion University

Dr. Martha Sager
American University

Mr. James Hannaham, Acting Director
Water Resources Research Center
University of the District of Columbia

Dr. A. Jose Jones, Acting Dean
College of Life Sciences
University of District of Columbia

Dr. Wilbert Wilson, Chair
Environmental Science Department
School of Human Ecology
Howard University

Mr. John Woodson

Dr. Robert Lippson
National Marine Fisheries Service
National Oceanic and Atmospheric
Administration

Dr. Aaron Rosenfield, Director
Oxford Laboratory
Northeast Fisheries Center
National Marine Fisheries Service
National Oceanic and Atmospheric
Administration

Dr. Walmar Klassen, Acting Director
Beltsville Agricultural Research Center
Alternates: Dr. Allan Isense
Dr. Jack R. Plimmer

Dr. Richard Jachowski, Chief
Branch of Migratory Bird Research
Patuxent Wildlife Research Center
US Fish and Wildlife Service

Available Technology Subcommittee
Dr. Clifford W. Randall, Co-Chairman
Dr. Archie McDonnell, Co-Chairman